ORLANDO 2003
SolidWorks
World
Welcome New
SolidWorks User!

Advanced Modeling Techniques

Mark Biasotti
CAD Discipline Lead

SolidWorks World

Advanced Modeling Techniques

ORLANDO 2003
SolidWorks World

Advanced Modeling Techniques

Topics Covered:

- Design Intent Explained
  Importing from sketch and Pictures
- Surface Connection C1 verses C2
- Tolerance Problems and resolving Ambiguity
- When to use Fill over Loft or Sweep
- How to use 2D and 3D sketch Splines
- How to control Sketch Splines
- Explanation of C1 verses C2 continuity
- Controlling Fill, Loft and Sweep features with Reference surfaces.
- Using Surfaces Utilities: Trim, Extend, Untrim, Knit, Thicken, etc.
- Tips for Debugging Shelling
- Using Delete face and Replace Face
- How to “Part out” housings using Base Derive, Split and Split multi-body

SolidWorks World

Design Intent

ORLANDO 2013
SolidWorks World

Solids Modeling verses Surface Modeling Approach

- **Solid Approach: Resultant edge is not accurate to the Design Intent**

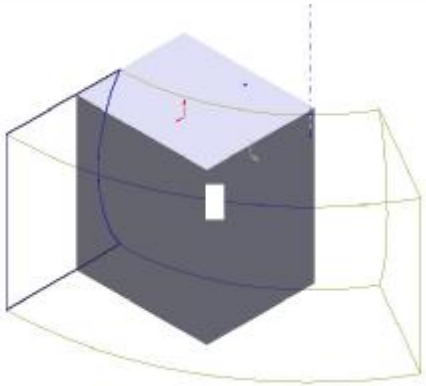

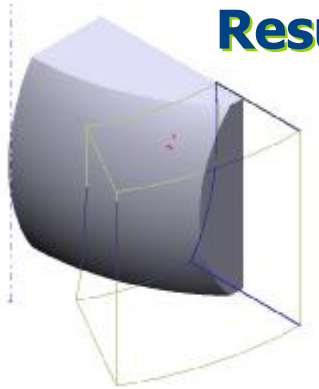

- **Surface Approach:Resultant edge IS accurate to the Design Intent**

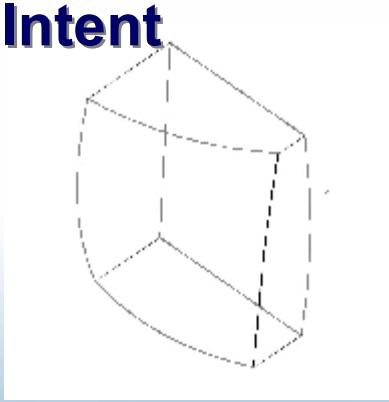

SolidWorks World

Solids vs. Surfacing

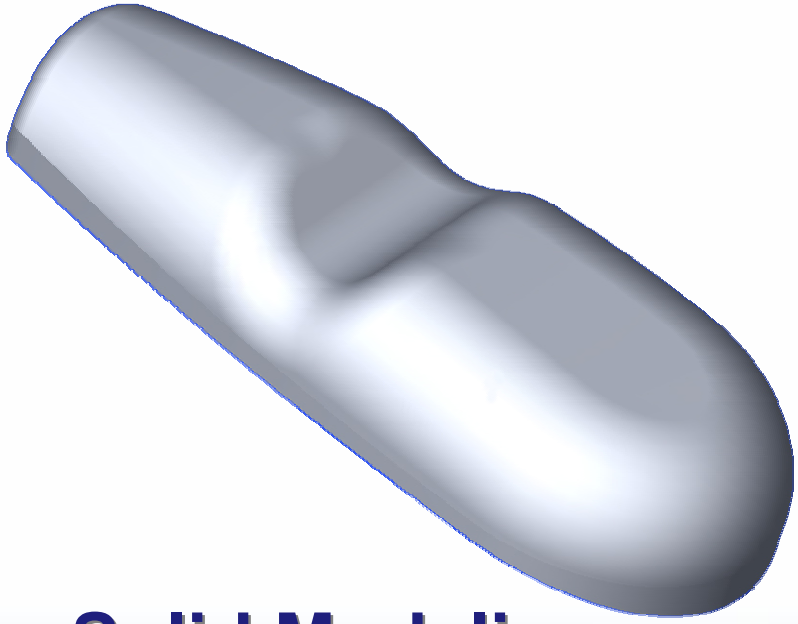

Solid Modeling Approach

Surface Modeling Approach

ORLANDO 2003
SolidWorks World

Main Form vs. Localized features

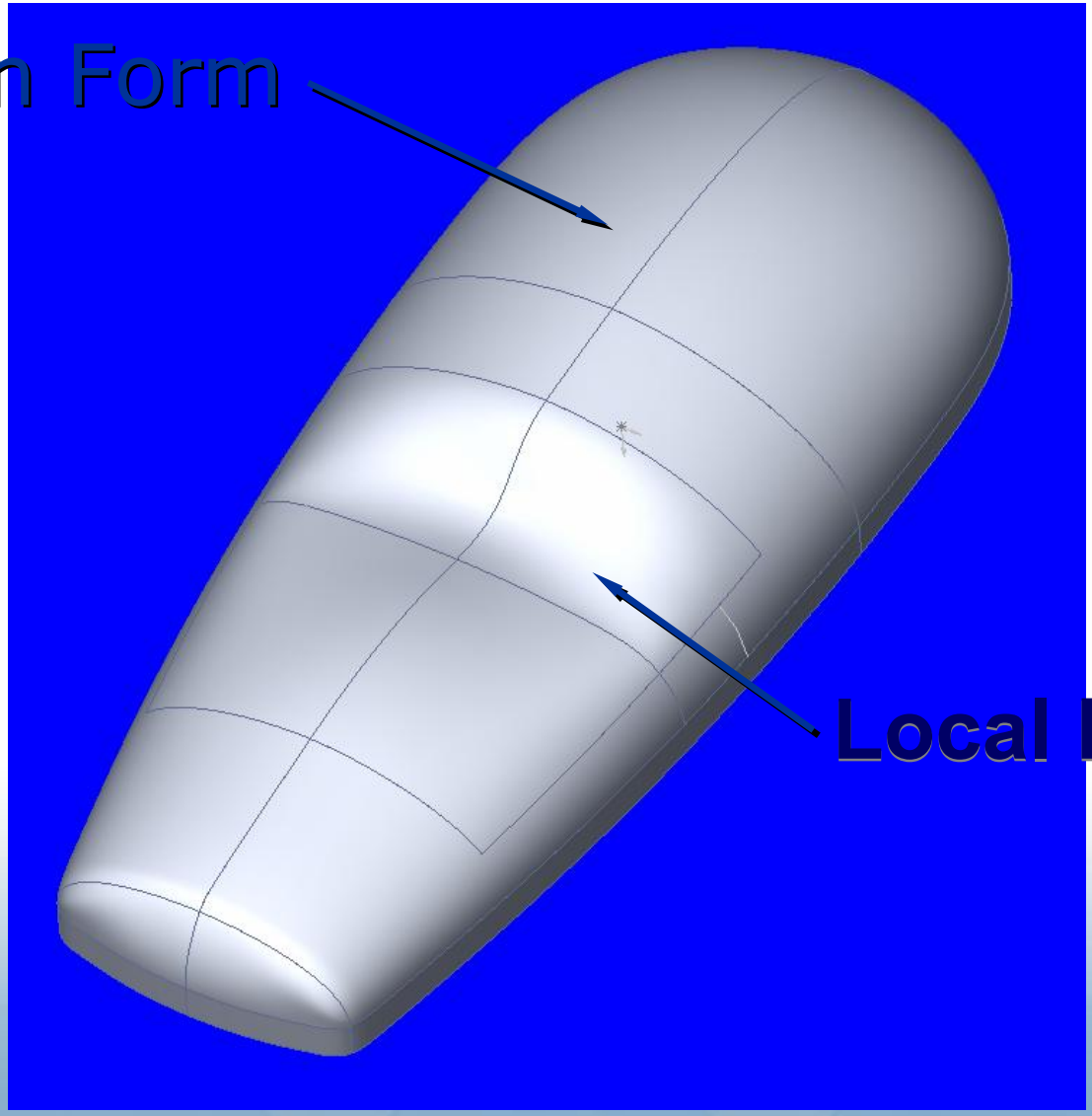

SolidWorks World

Robustness, Shelling etc.

Chances are this will NOT Shell

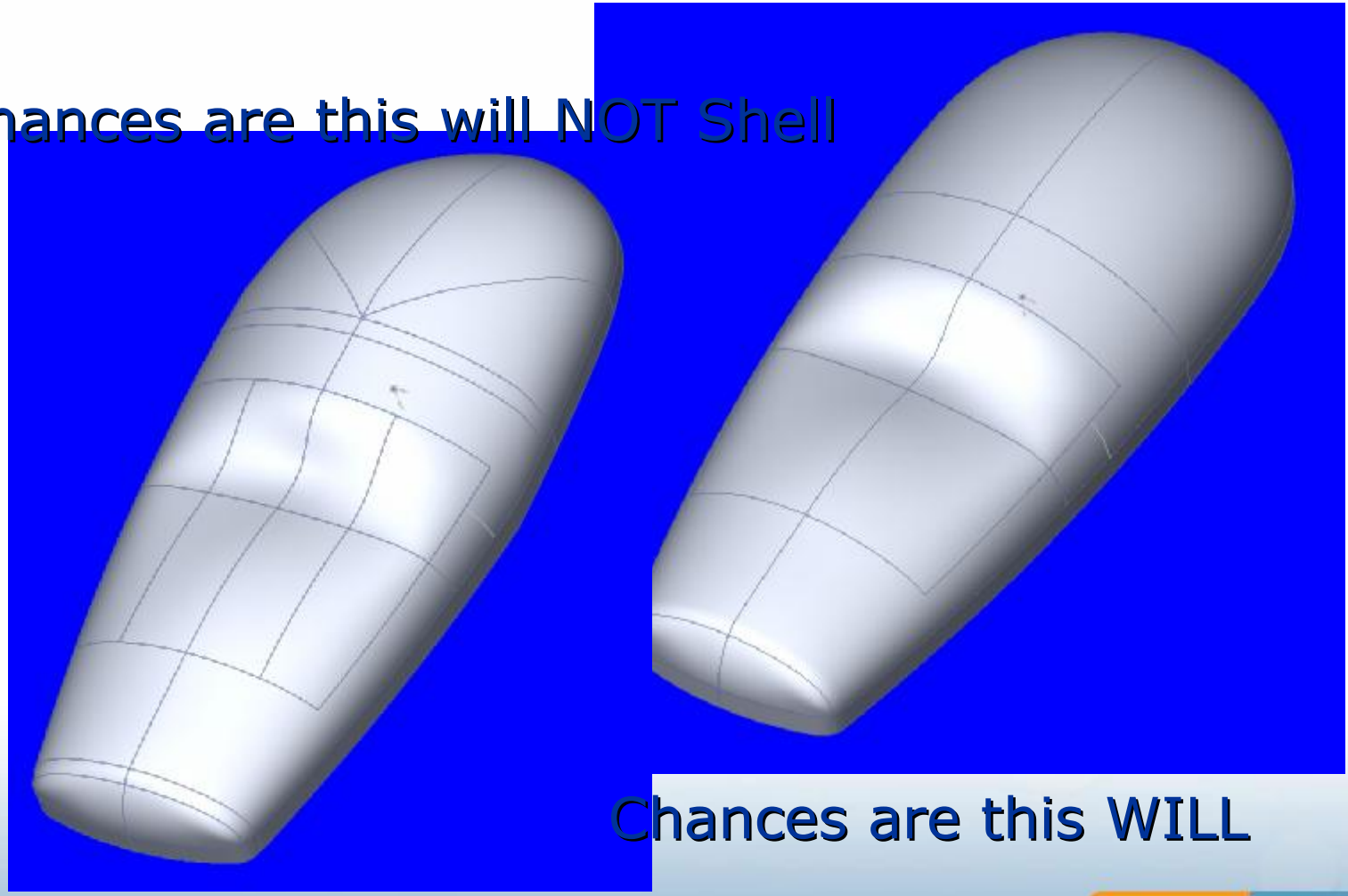

Chances are this WILL

ORLANDO 2013
SolidWorks World

Importance of Surfacing

atures not possible using more familiar
rude, cut, round etc.

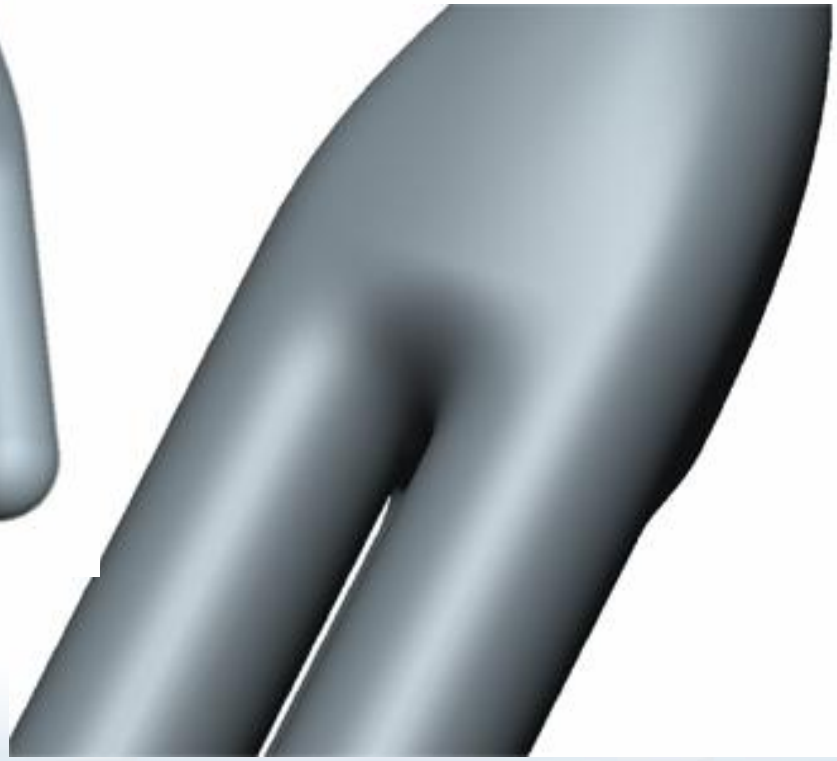

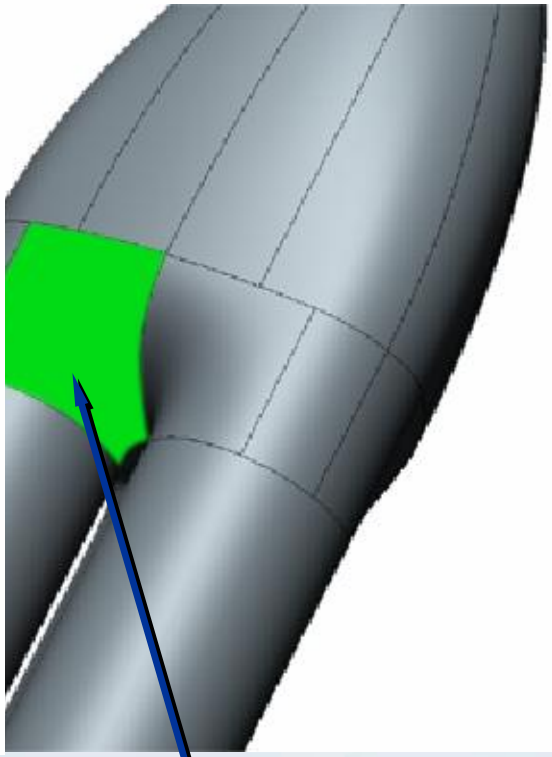

N-Sided patch (Fill surface)

SolidWorks World

True Hybrid Surface/Solid Modeling

Ability to go from Solid bodies to Surface bodies back to Solid bodies in same part file.

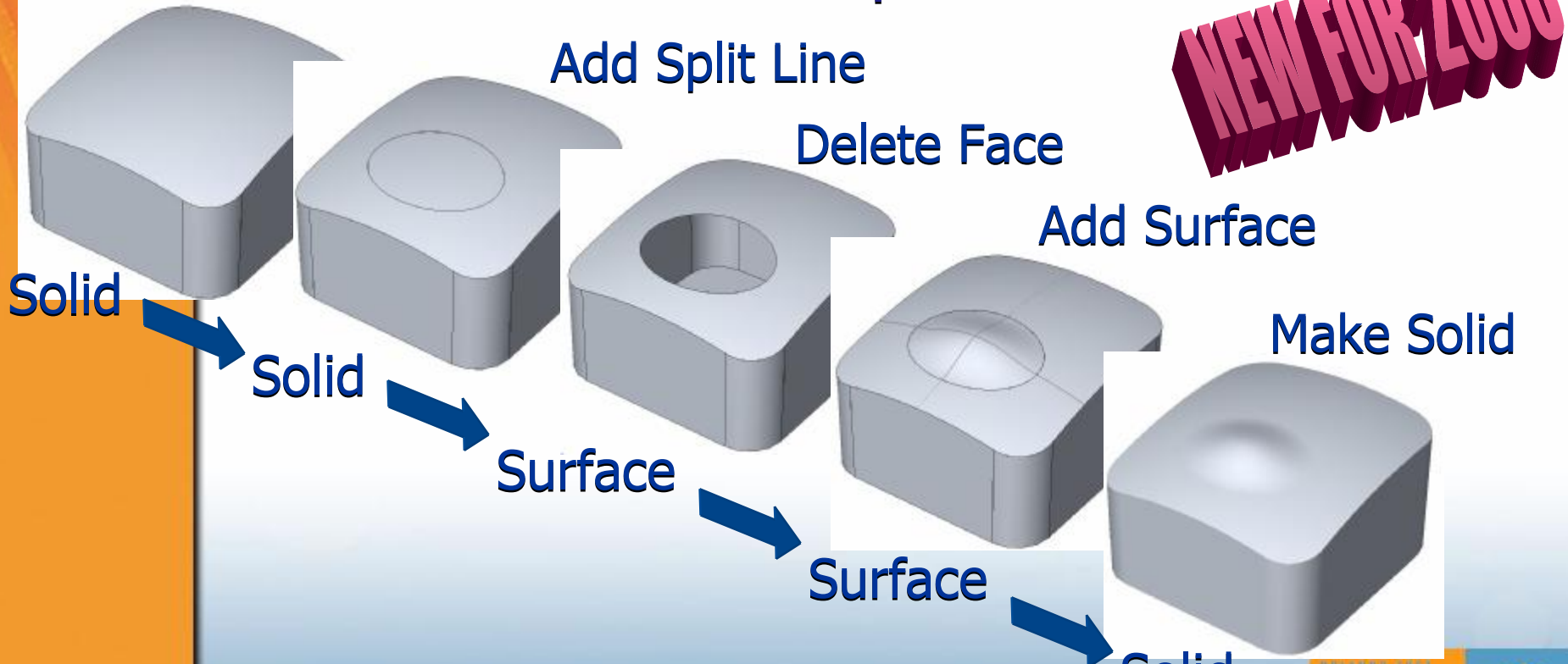

SolidWorks World

Surface Modeling Features

Importing Design Intent

ORLANDO 2013
SolidWorks World

Curves – Importing Design Intent

- 2D reference Profiles of Front, Side
- Brought into part via import geometry and placed on sketch plane

Example

Curves – Picture in Sketch

- Bitmap image on sketch plane
- When no hard geometry exists

Example

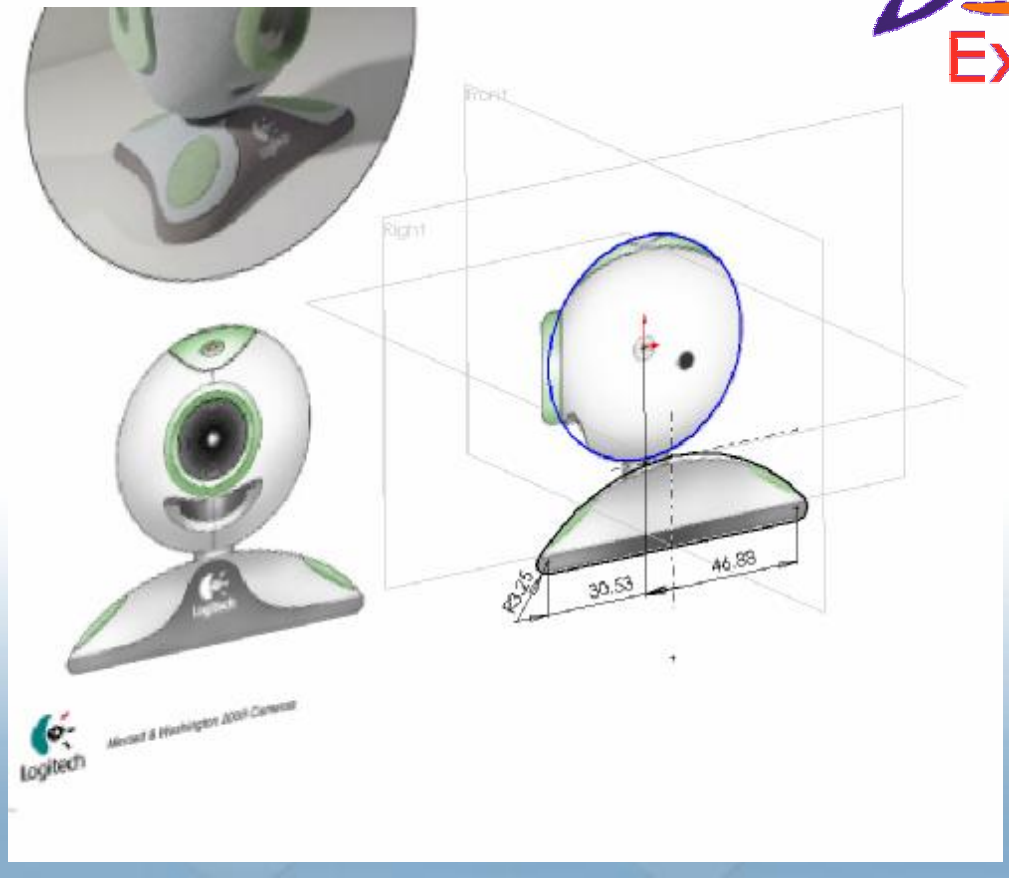

SolidWorks World

TIPS For Importing Design Intent

1) Use DXF import to a drawing or IGES import to a sketch.
2) Setup up reference sketches of this imported geometry at the beginning of your part that represent the Front, Top, Side of the Design.
3) Use the Modify Sketch t to position the import sketches.
4) Use Tools/Sketch Tools/Insert Picture when no “hard” geometry exists.

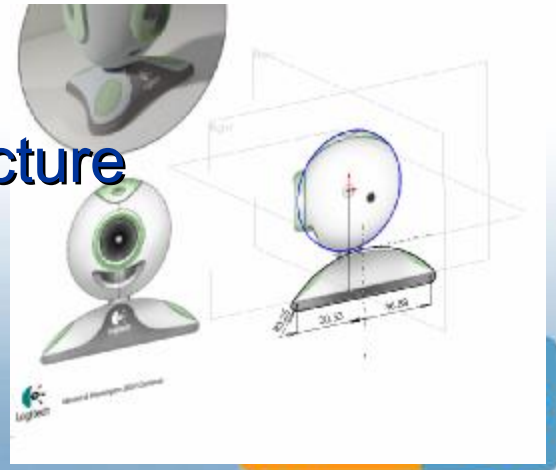

C0, C1, C2 Tangency

Also C3, C4 types in some Class A surface modelers

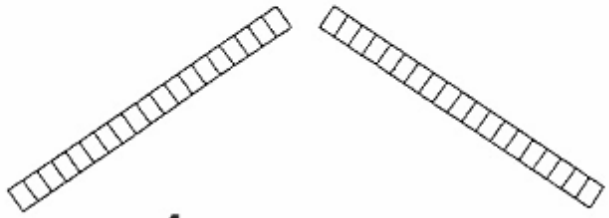

C^{-1} Un-matched

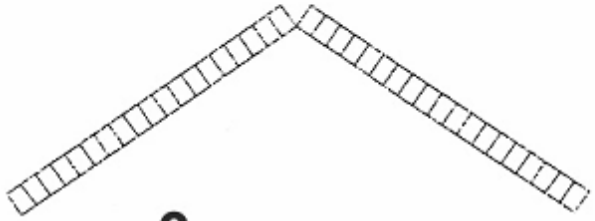

C^{0} matched

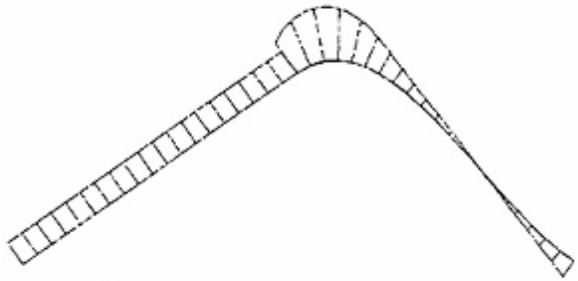

C^{1} Tangent Join

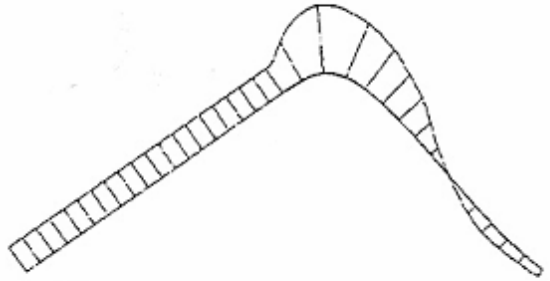

C^{2} Curvature Join

C1 Tangency

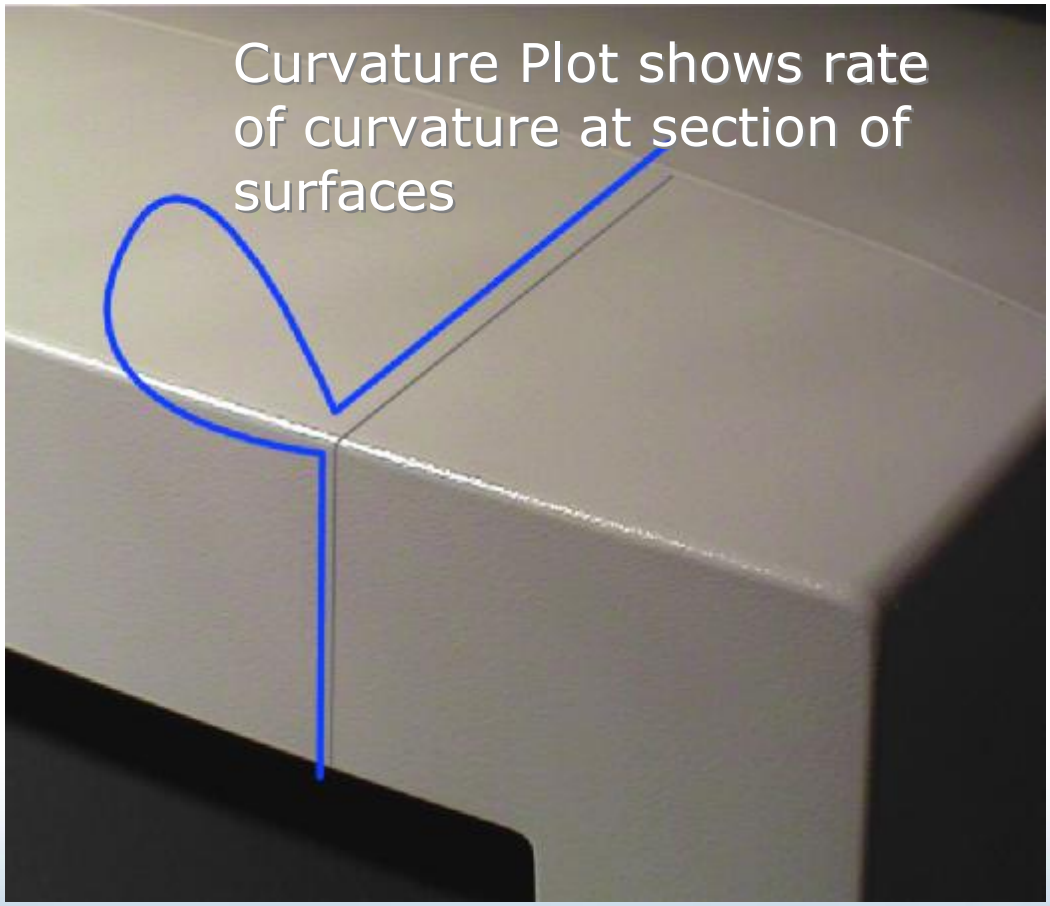

ORLANDO 2013
SolidWorks World

C2 Continuity

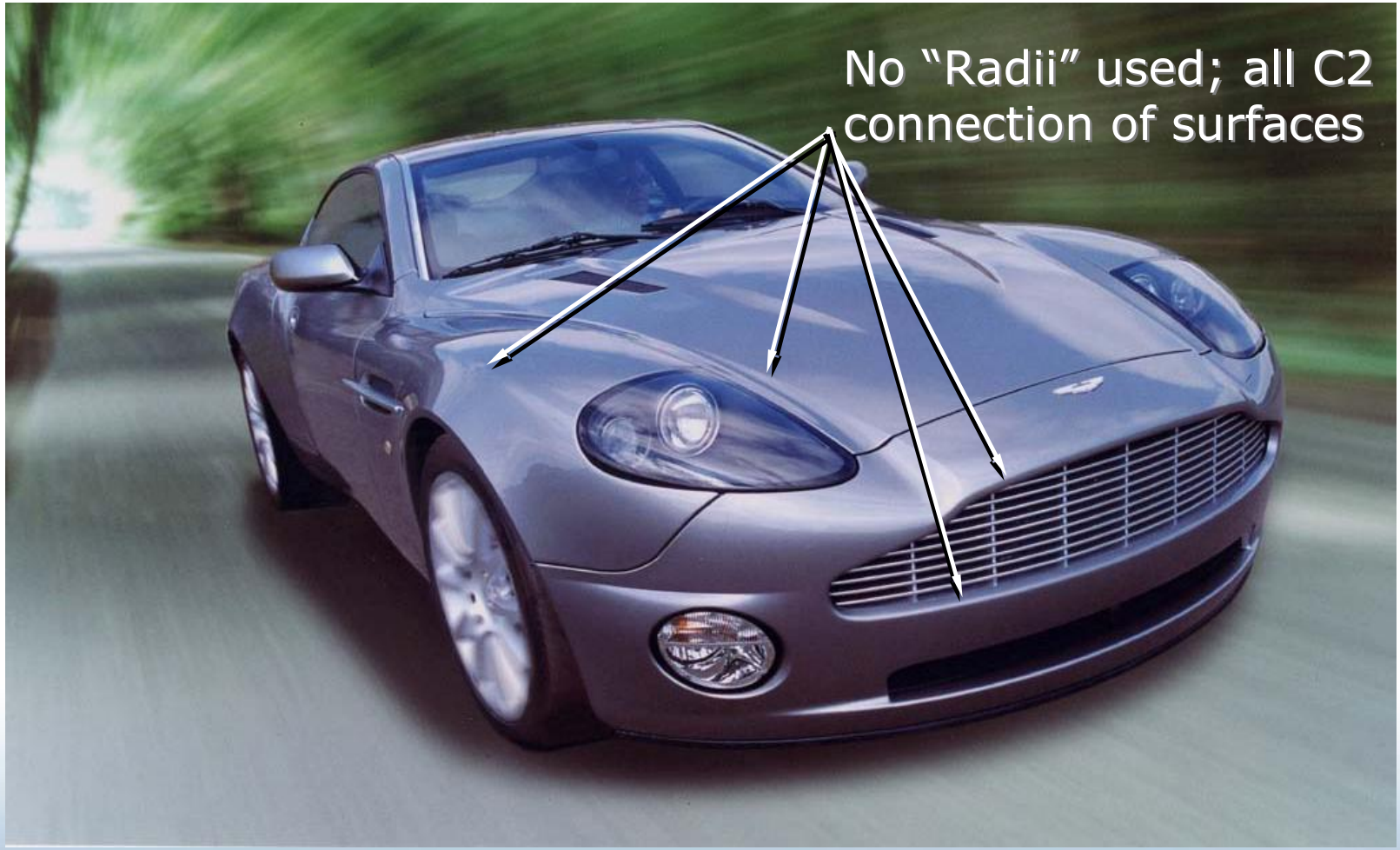

SolidWorks World

Surface Connection

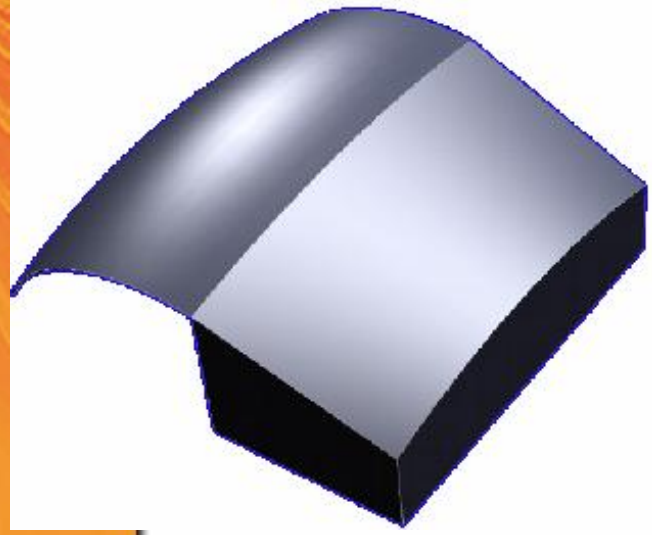

C0 CONDITION

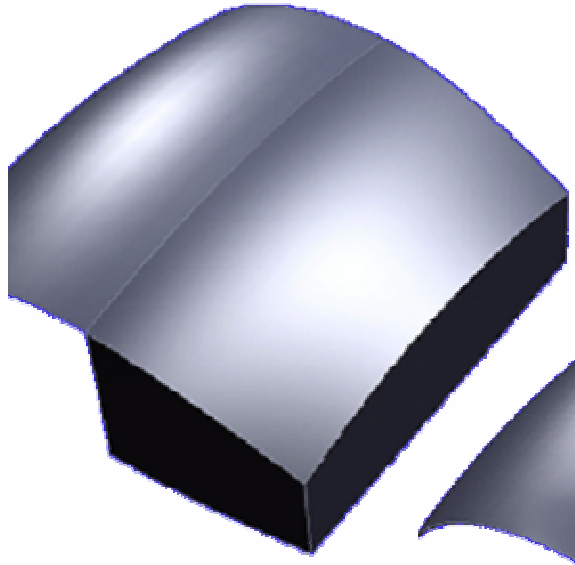

C1 CONDITION
(Tangency)

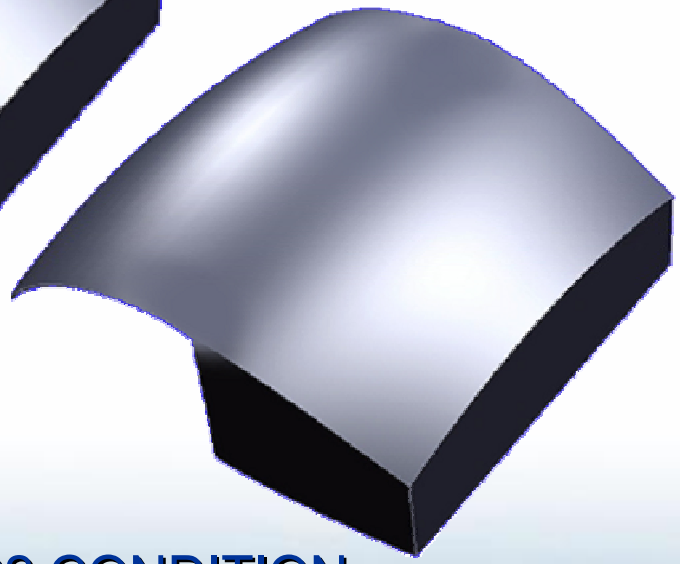

C2 CONDITION
(Continuity)

SolidWorks World

Curve and Surface Analysis

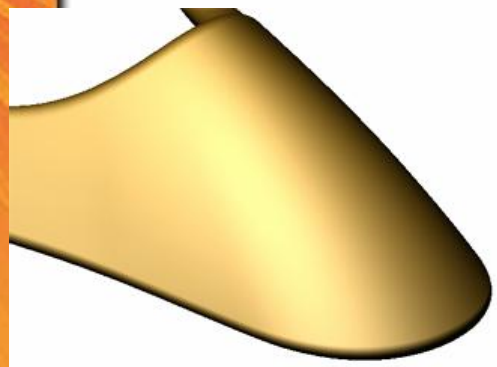

Open GL Shading

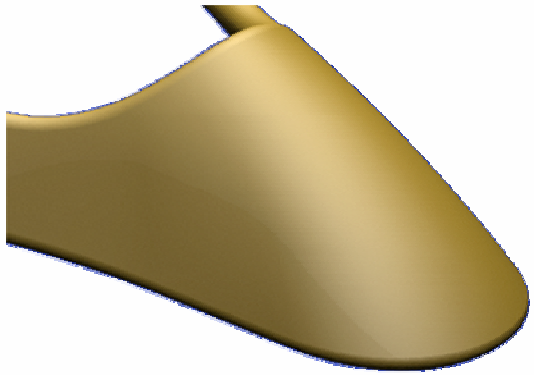

PhotoWorks Shading

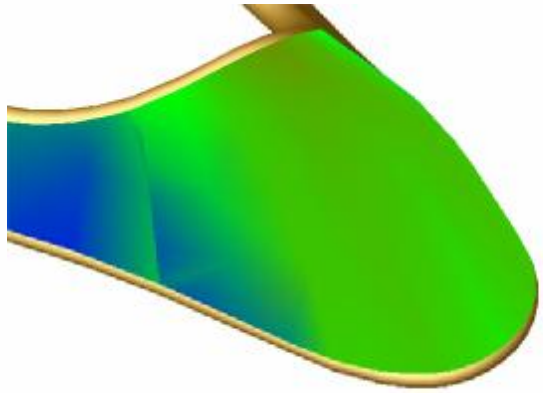

Face Curvature

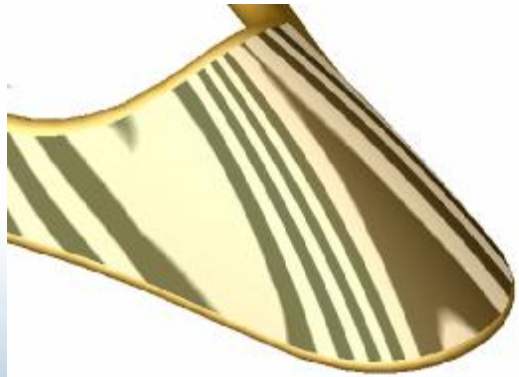

Face Zebra Stripes

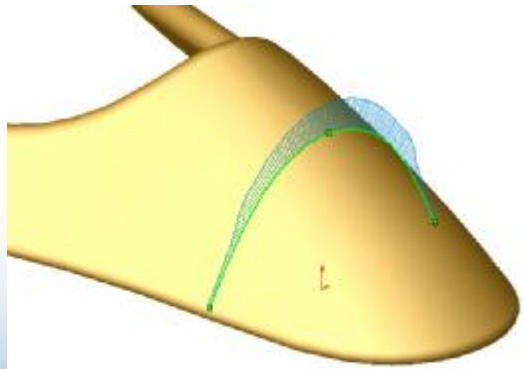

Inspect Curvature
(intersection curve)

ORLANDO 2013
SolidWorks World

Resolving Ambiguity

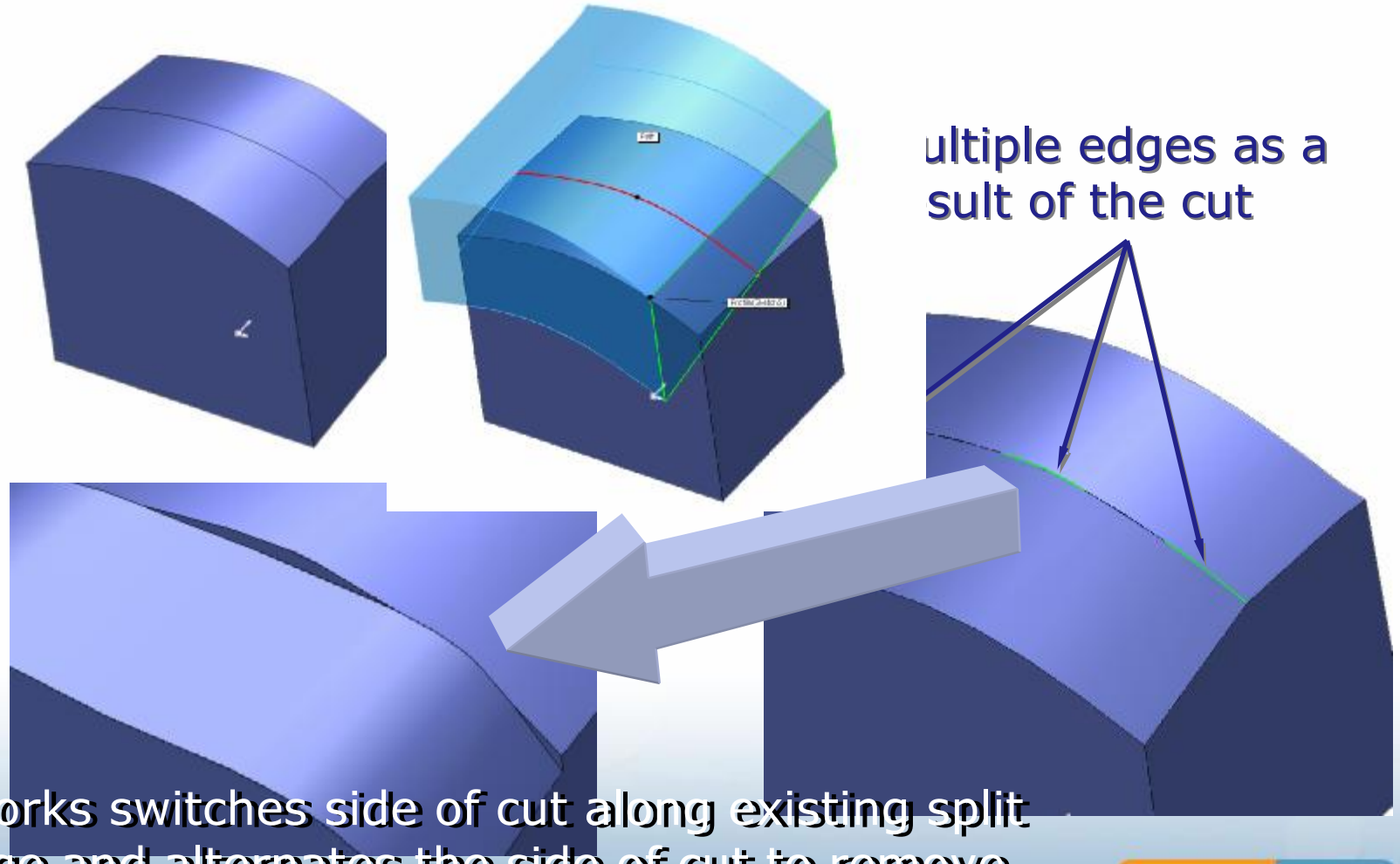

SolidWorks switches side of cut along existing split line edge and alternates the side of cut to remove material as it traverses the sweep path.

SolidWorks World

Resolving Ambiguity - Workaround

Use Projected Curve instead of Split line

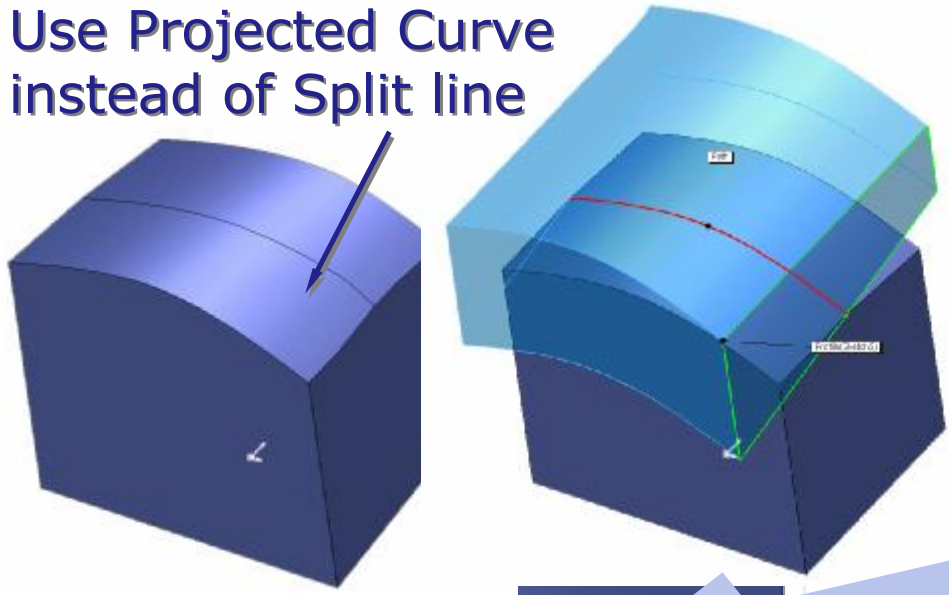

Single Edge as result of the cut

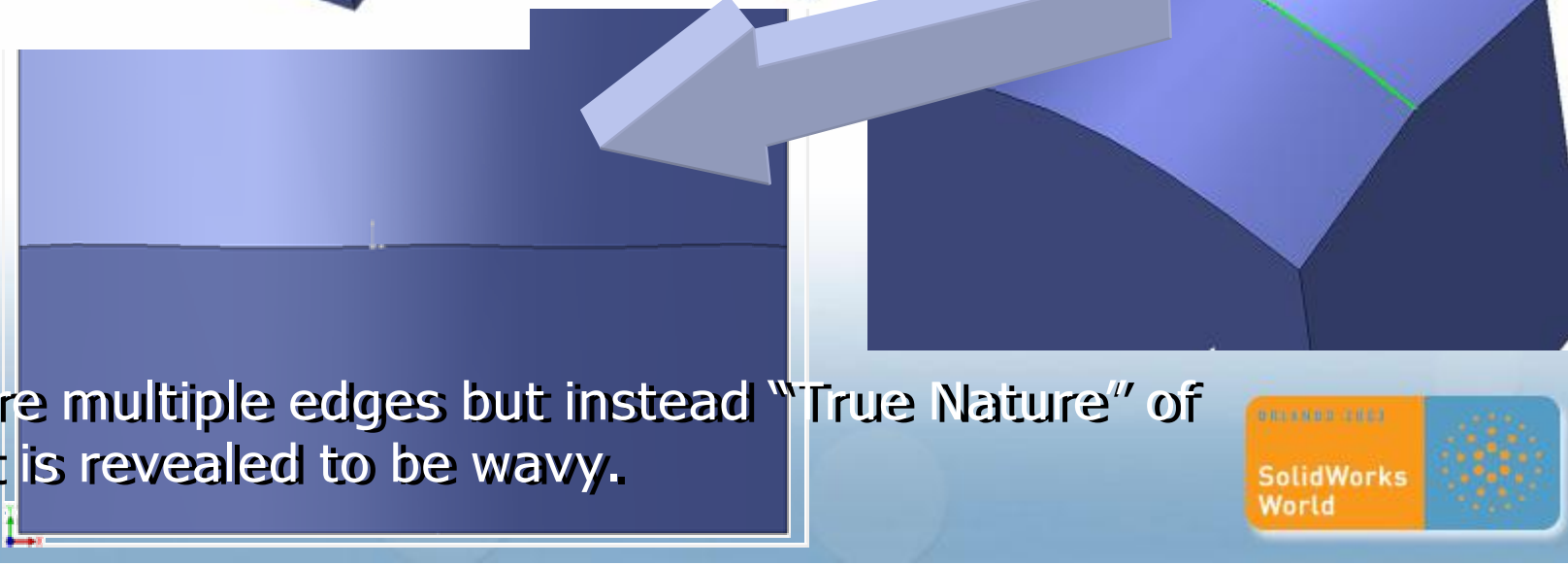

No more multiple edges but instead "True Nature" of the cut is revealed to be wavy.

ORLANDO 2013
SolidWorks World

Resolving Ambiguity - Workaround

1) Don't cut along Solid edges if you can afford to "over-cut"
2) Build model using surfaces connected by curve network.

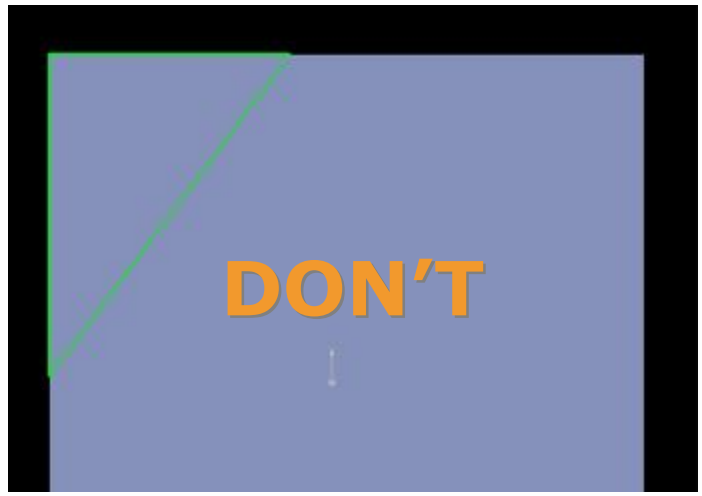

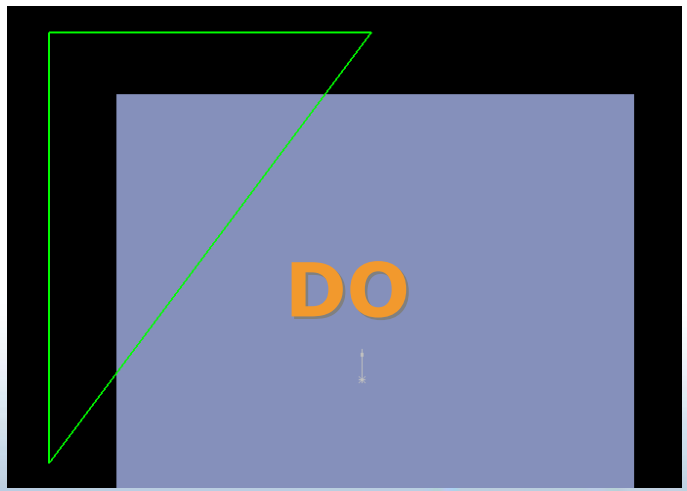

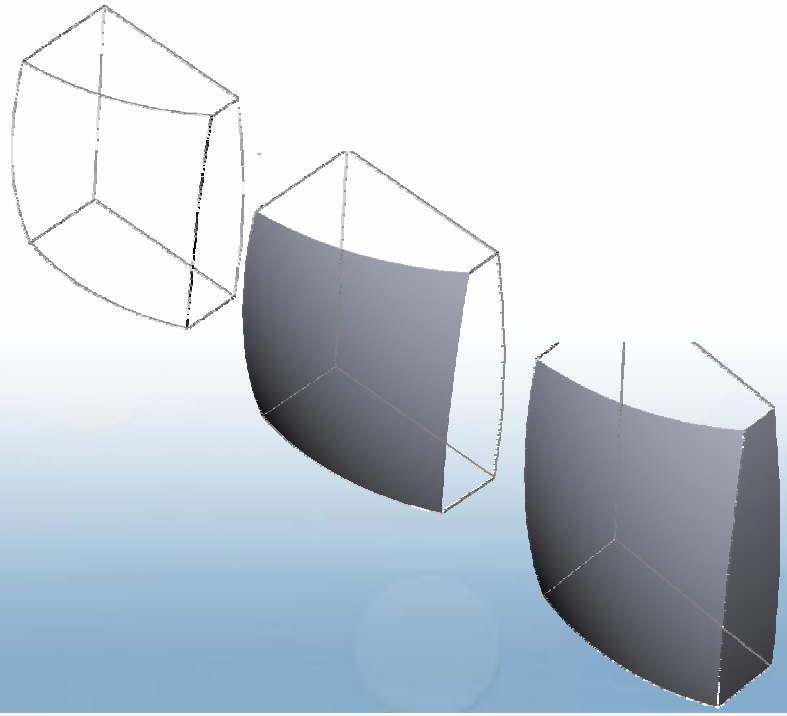

ORLANDO 2003
SolidWorks World

Resolving Ambiguity

This method avoids ambiguity by building to, and connecting directly to existing surface edges.

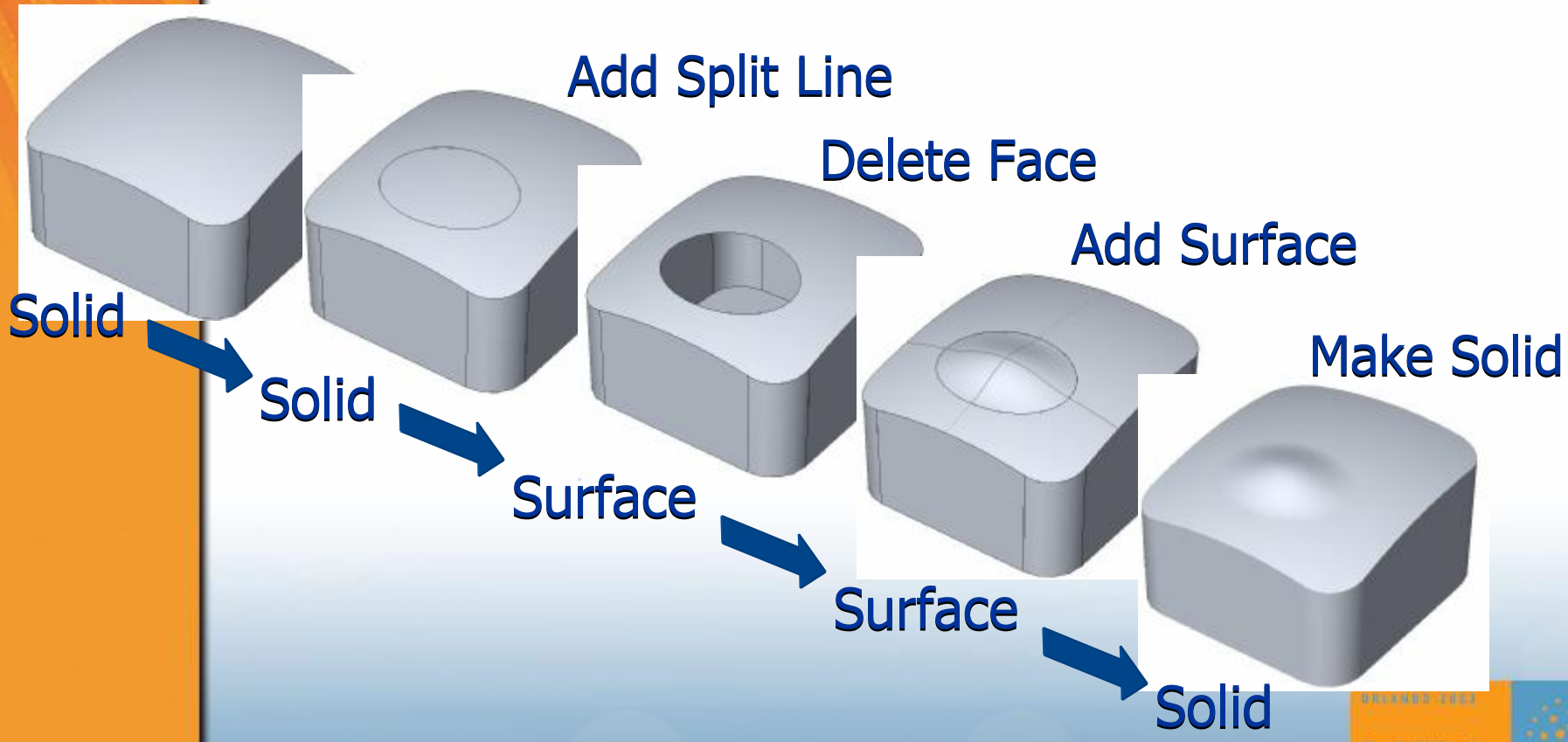

Resolving Ambiguity

Use Replace Face instead of Knit-thicken

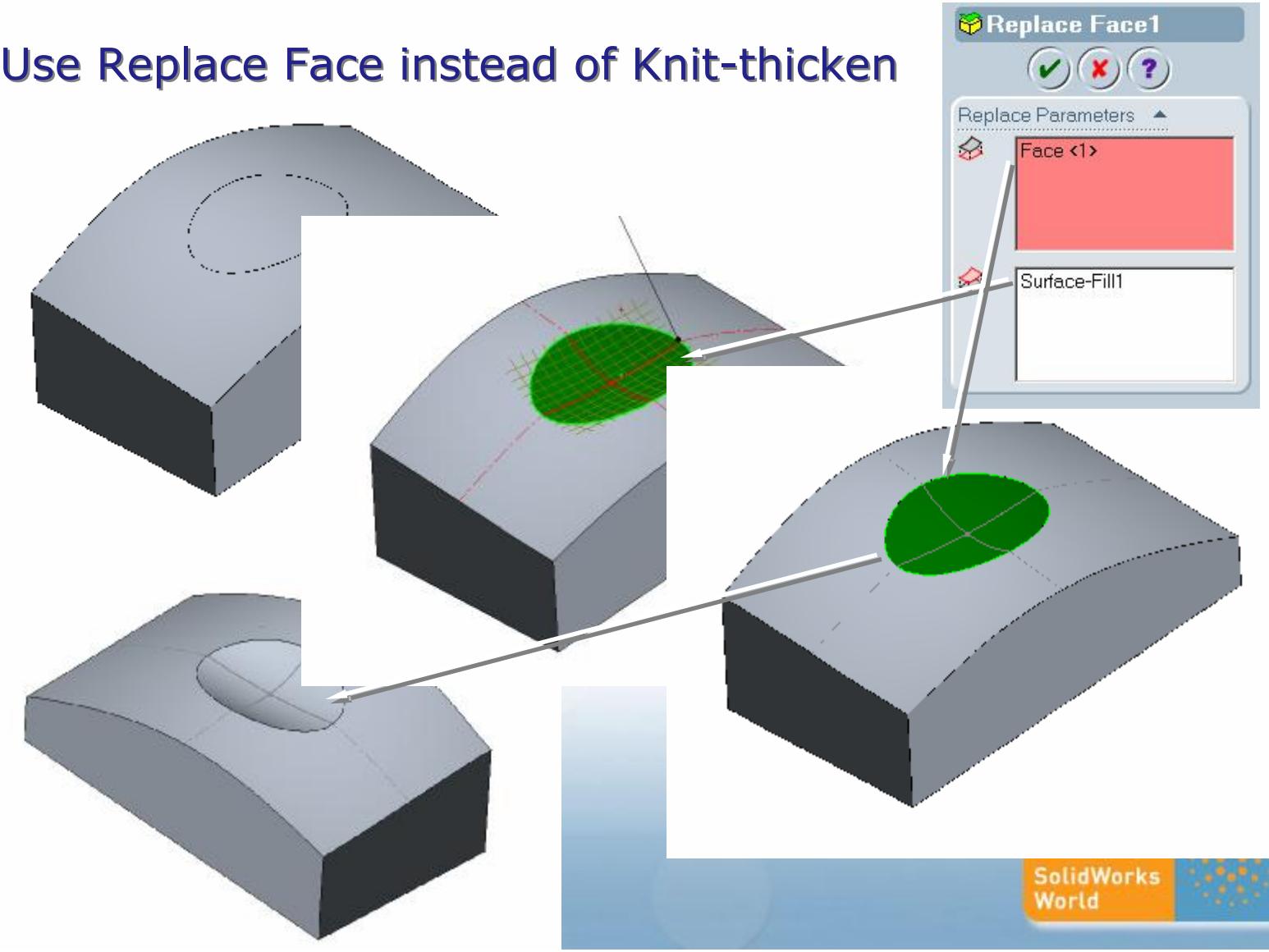

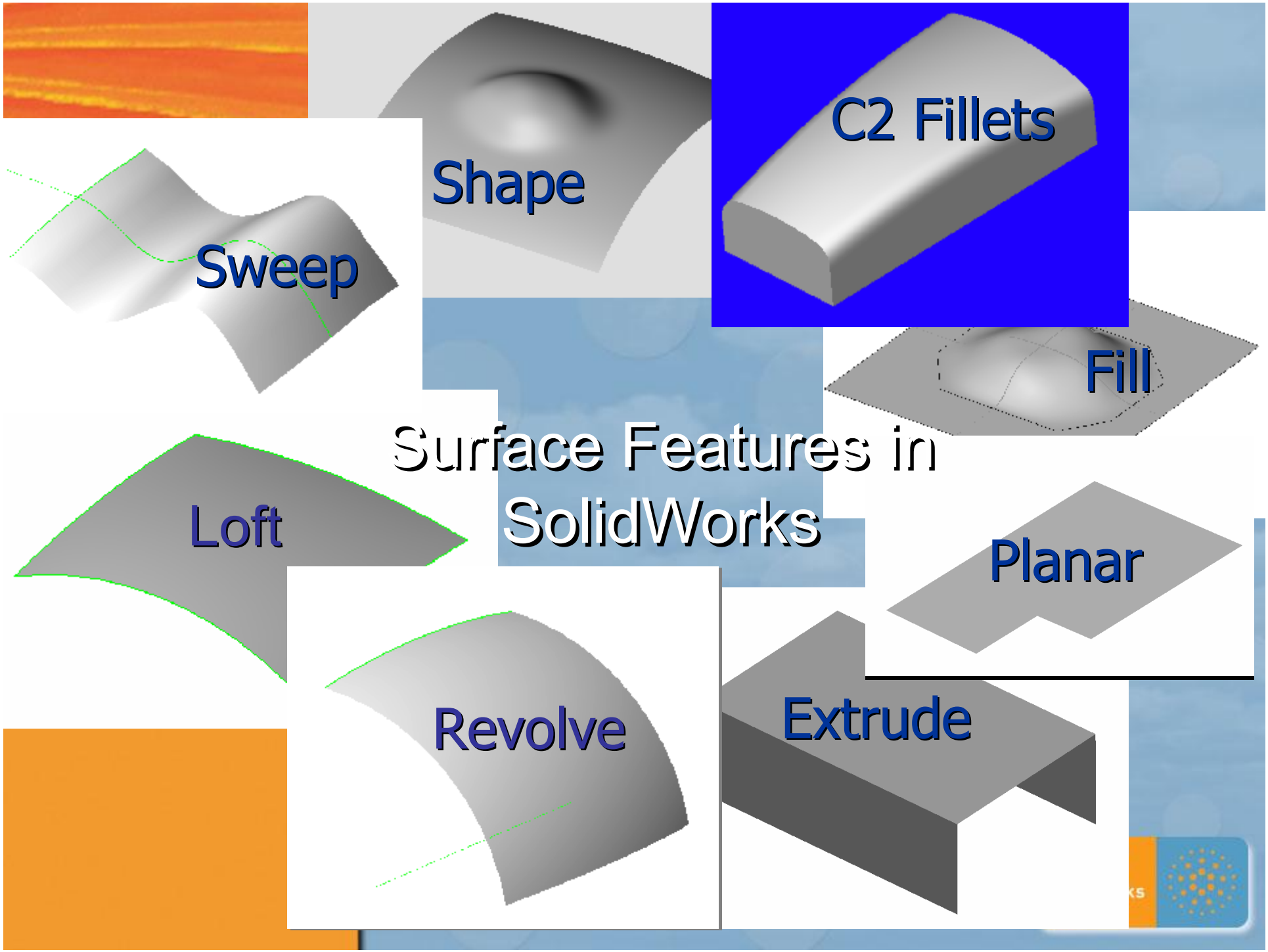
Shape
C2 Fillets
Sweep
Fill
Surface Features in SolidWorks
Loft
Planar
Revolve
Extrude

2D Sketch Curves

- **Spline sketch entity**
- **Inspect Curvature Plot Dynamically**
- **Moving Frames for “tweaking” internal points along the spline**

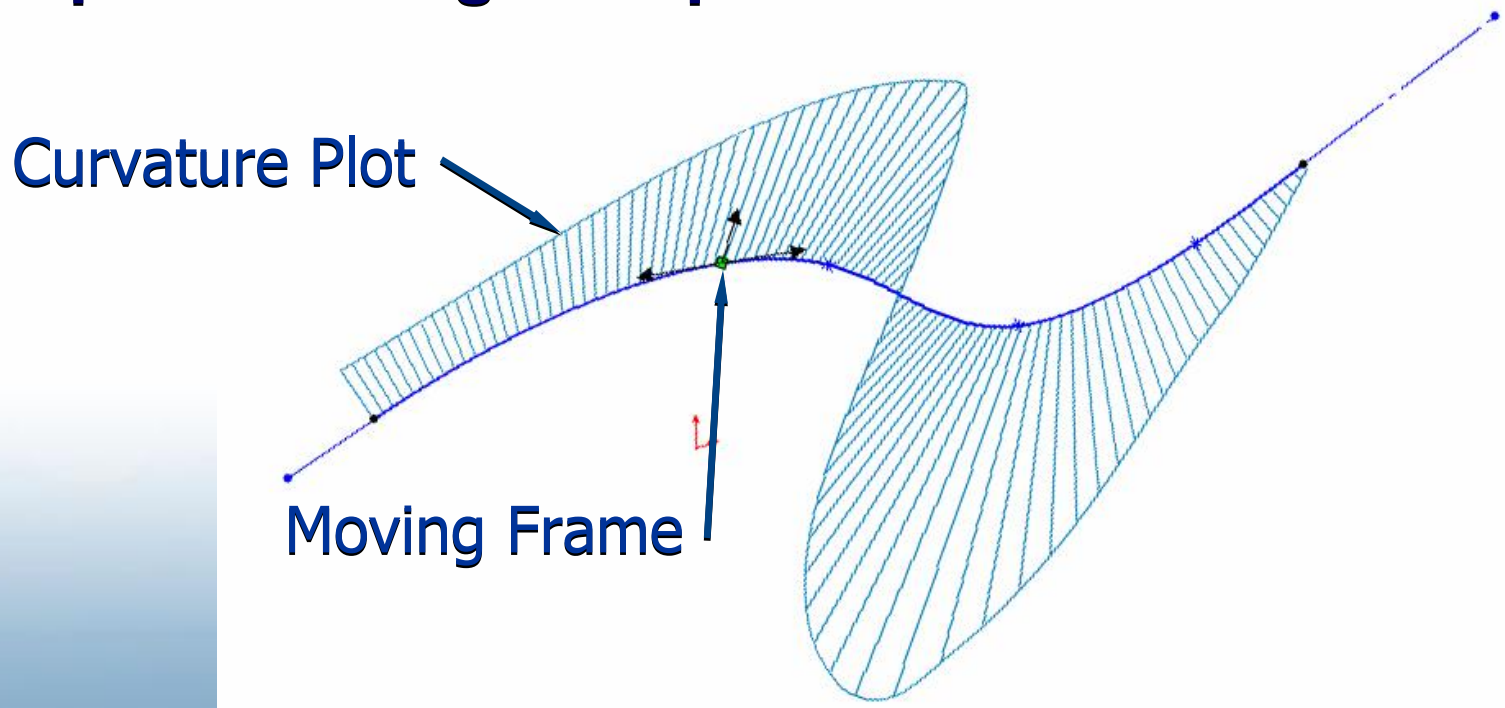

3D Sketch Curves

Like 2D sketch curves but not limited to planar.

Can be built and constrained in 3D space.

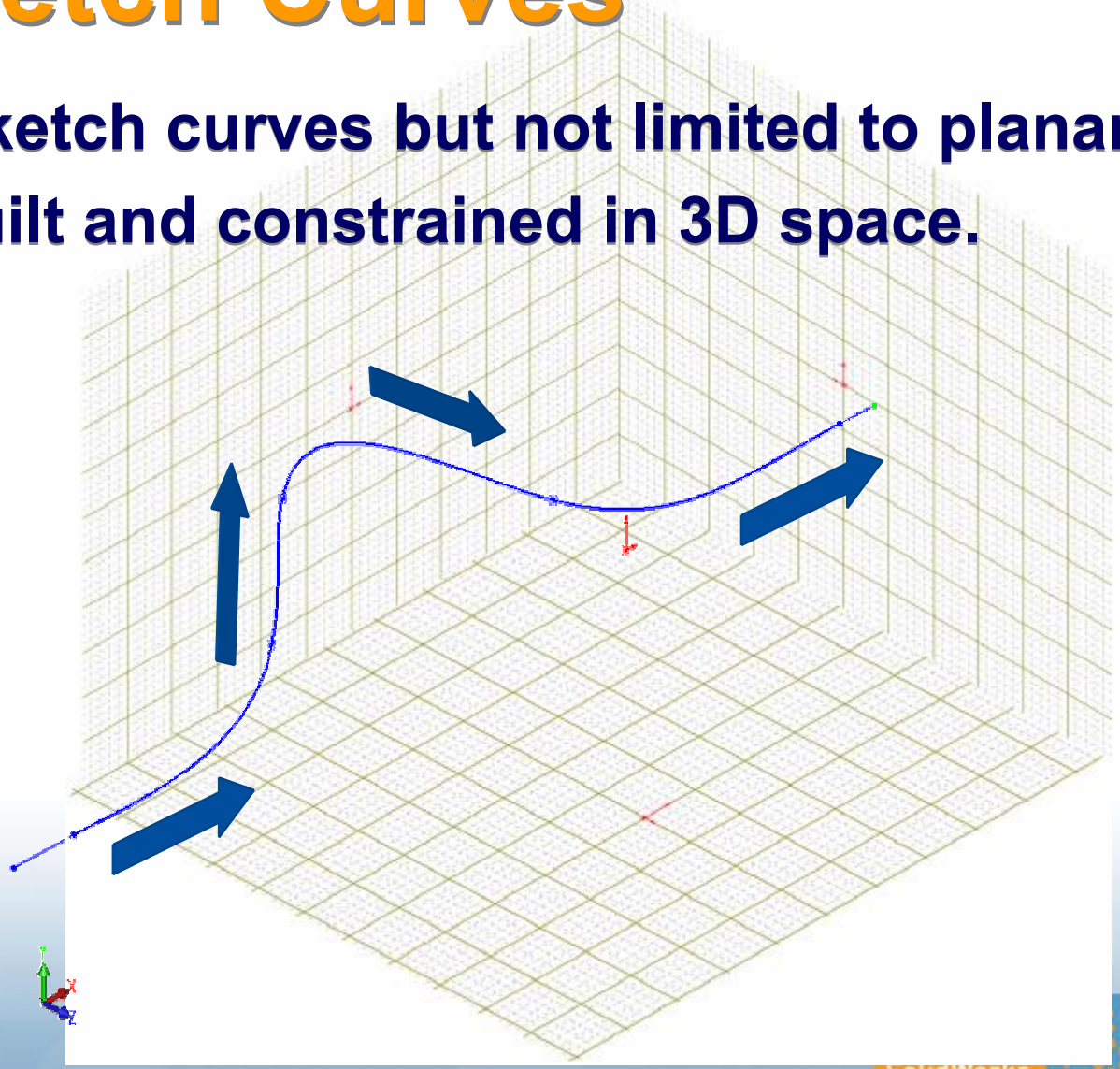

Sketch Curves

"Surfaces are only as good as the underlying curves that they're built upon."

Arc Segments
Sketch curve

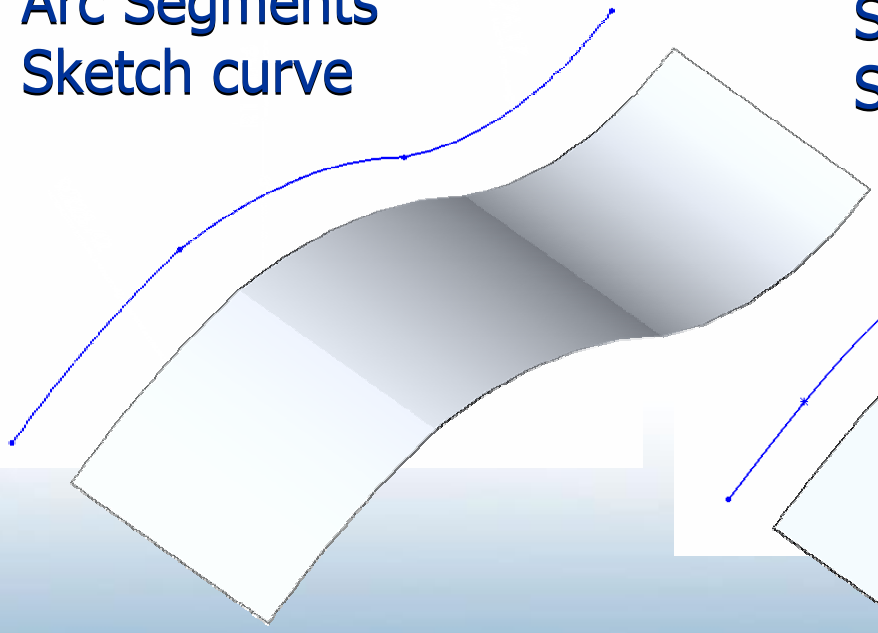

Single Spline
Sketch curve

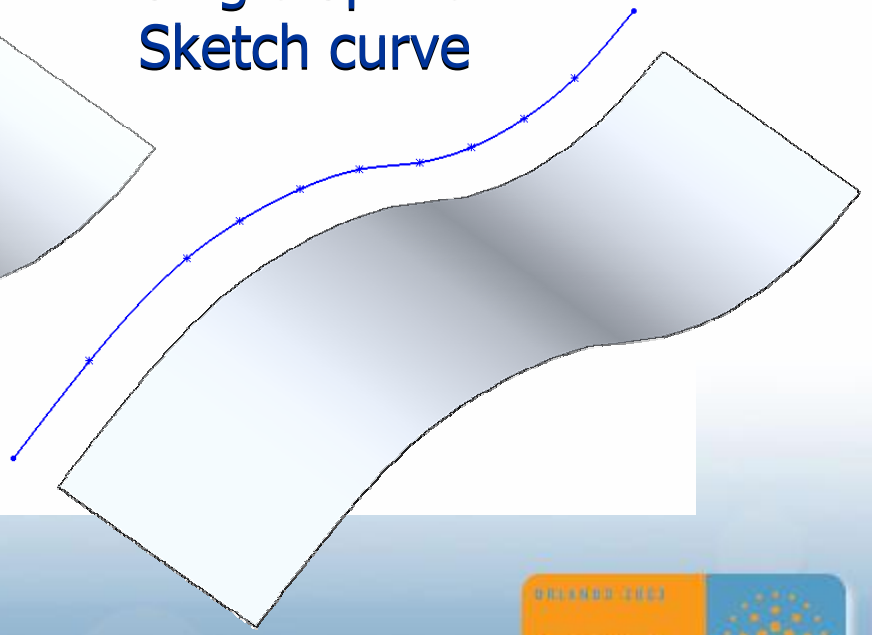

ORLANDO 2013
SolidWorks World

Sketch Profiles for Surfacing

- Multiple arc segments

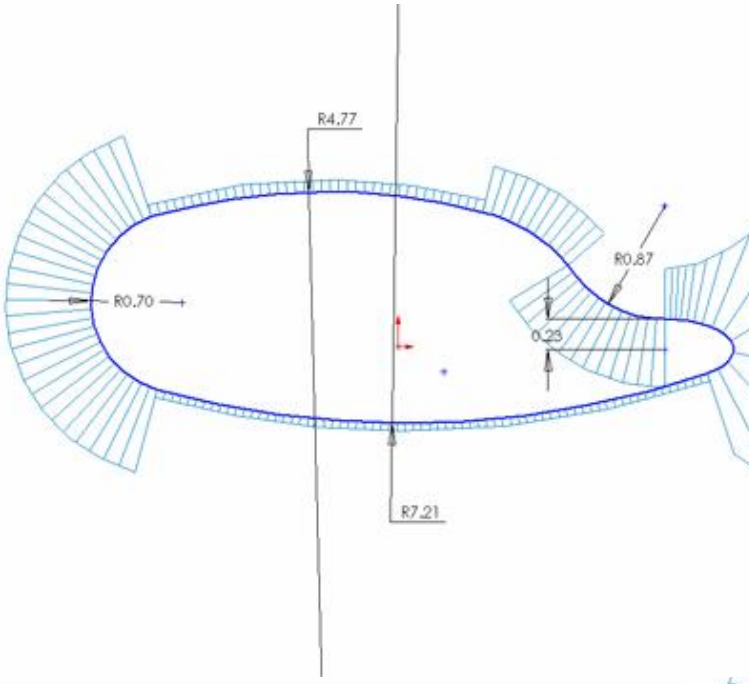

- No Continuity
- More edges in surface
- Profile more susceptible to failure

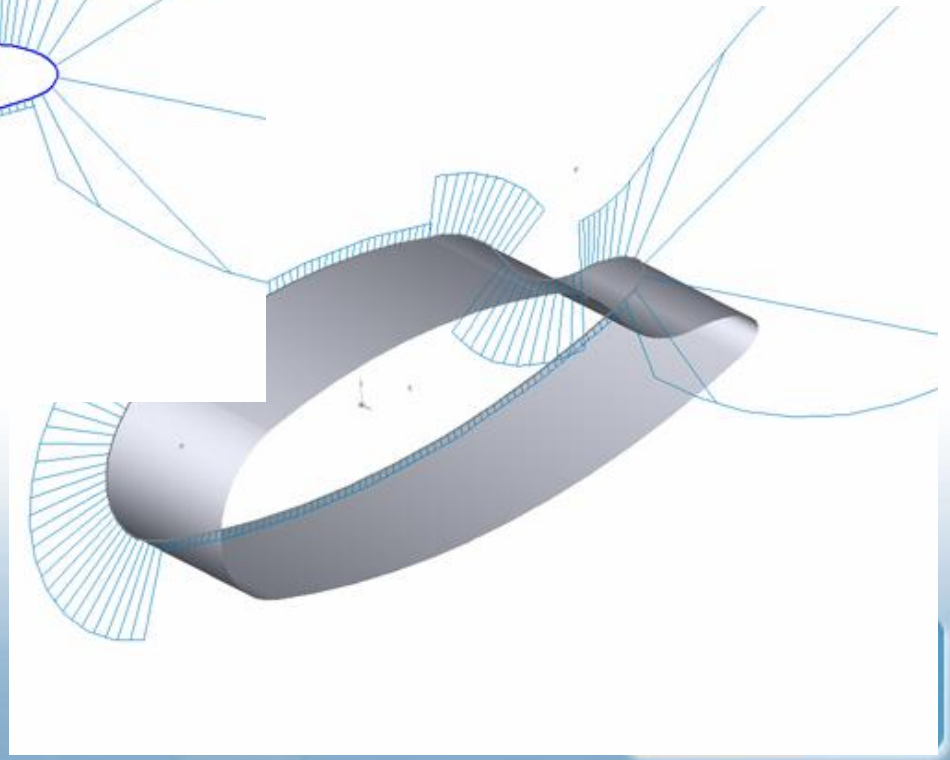

Sketch Profiles for Surfacing

- A few or one spline elements

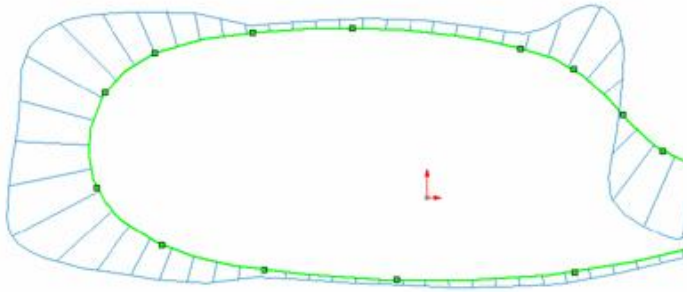

- Continuity
- Fewer Interim ISO lines
- Profile less susceptible to failure

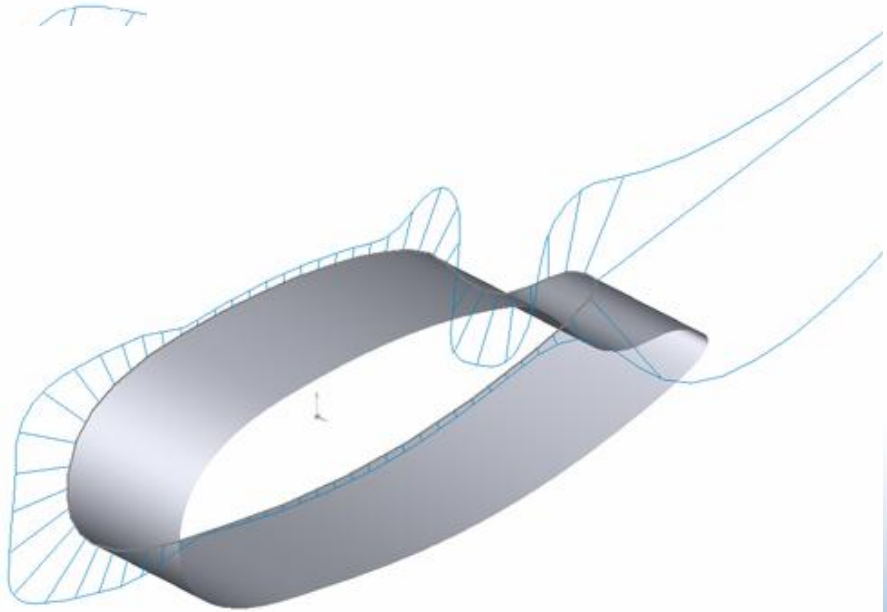

2D Sketch Curves

Fit Spline Function automatically overlays single Spline entity onto existing sketch Elements.

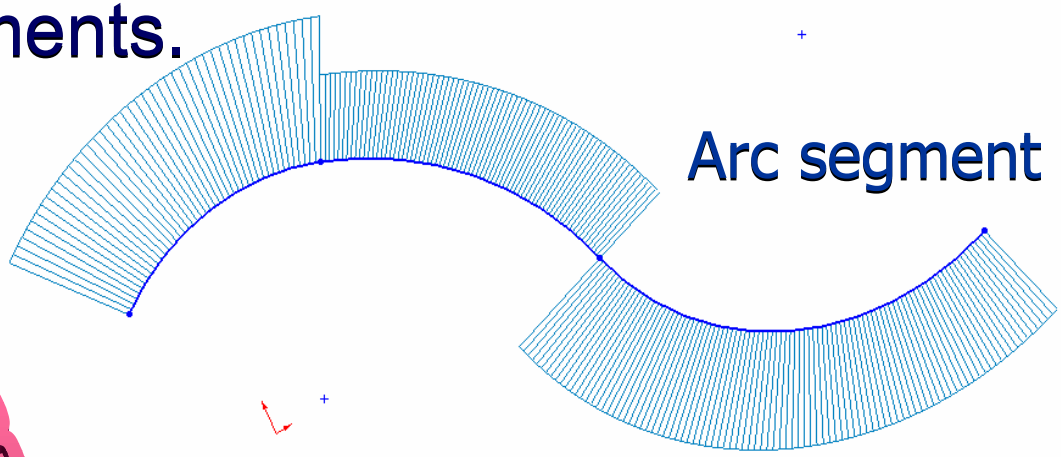

Arc segment sketch

NEW FOR 2003

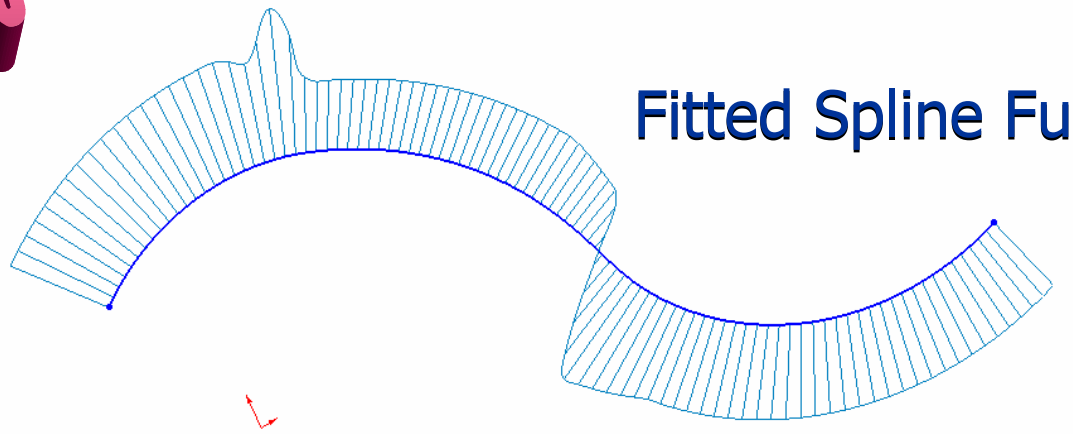

Fitted Spline Function

ORLANDO 2003
SolidWorks World

2pt Sketch Spline

Example

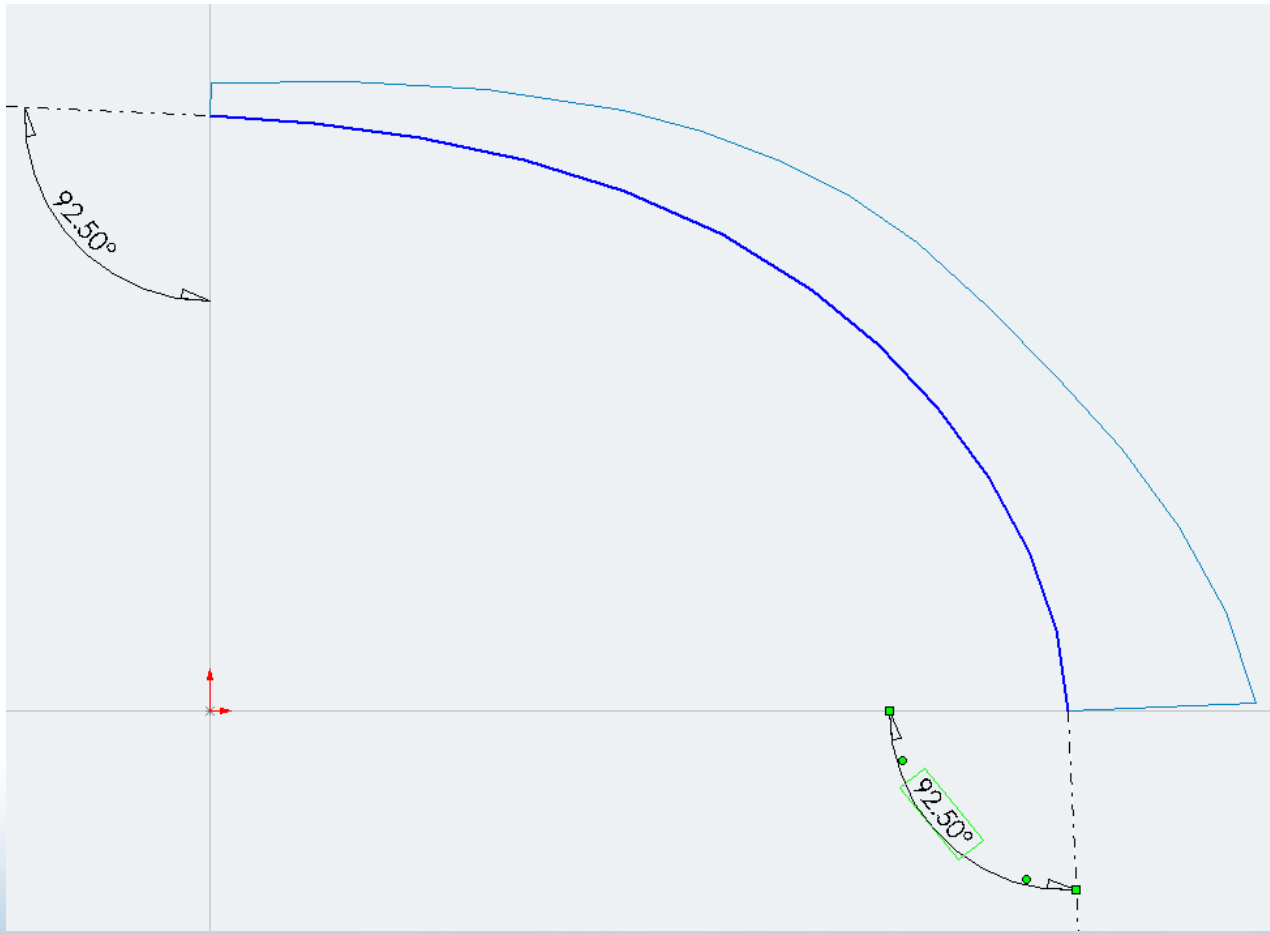

SolidWorks World

3d Sketch Spline

Example

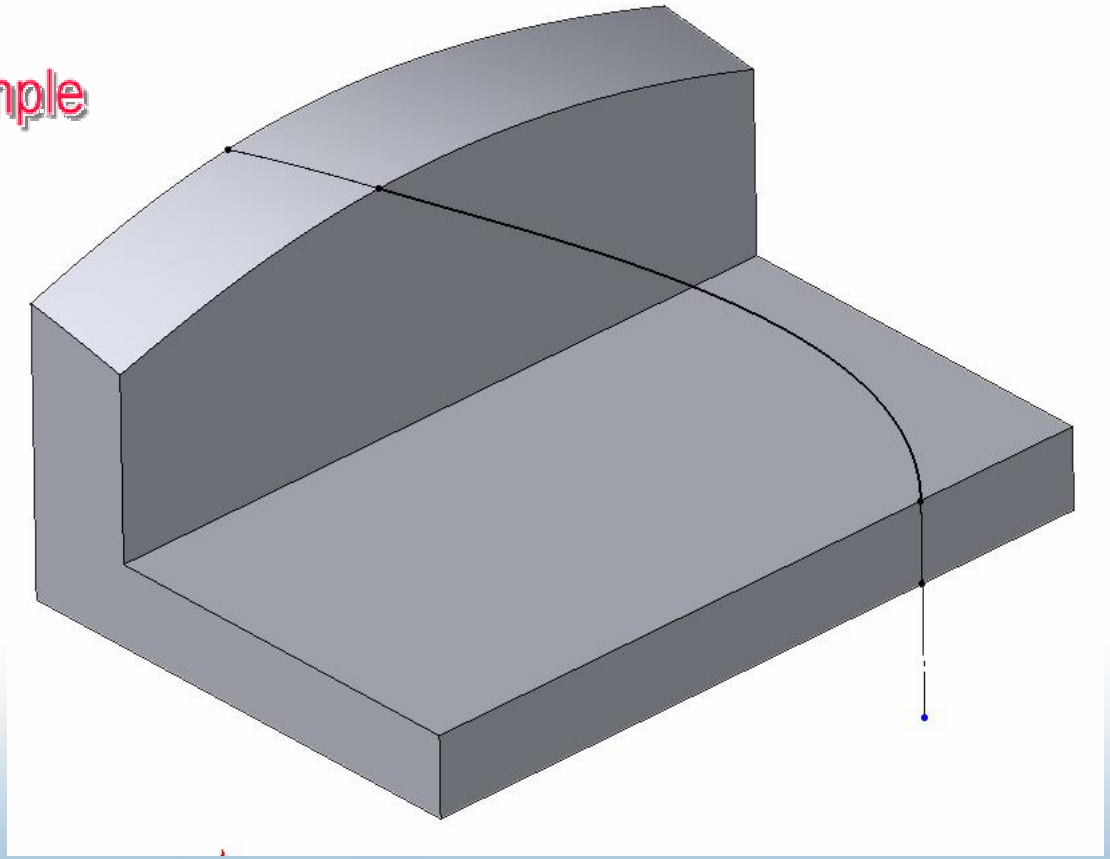

SolidWorks World

Splines – using existing references

Example

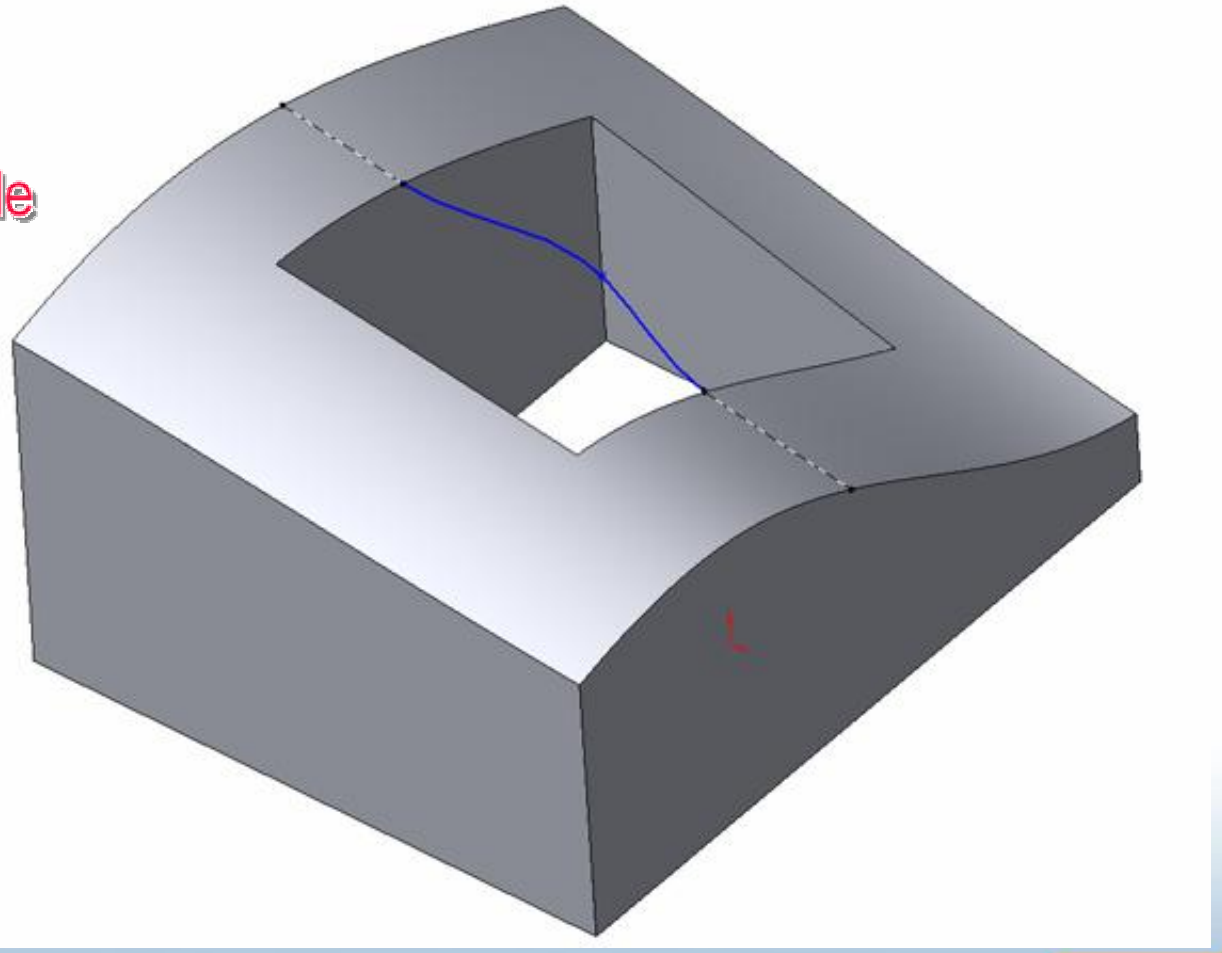

Controlling with Construction

Example

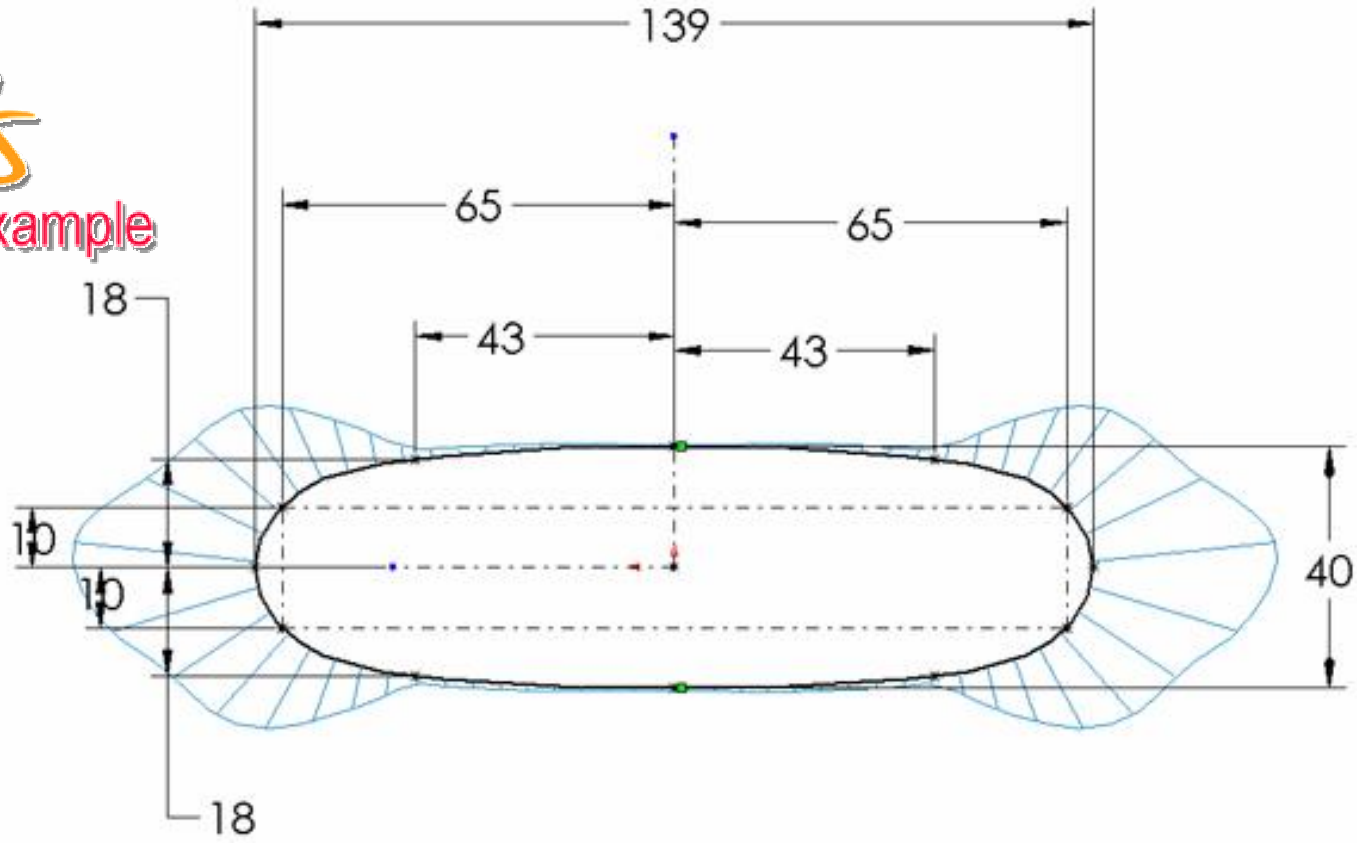

SolidWorks World

Controlling Tangency with Construction

Example

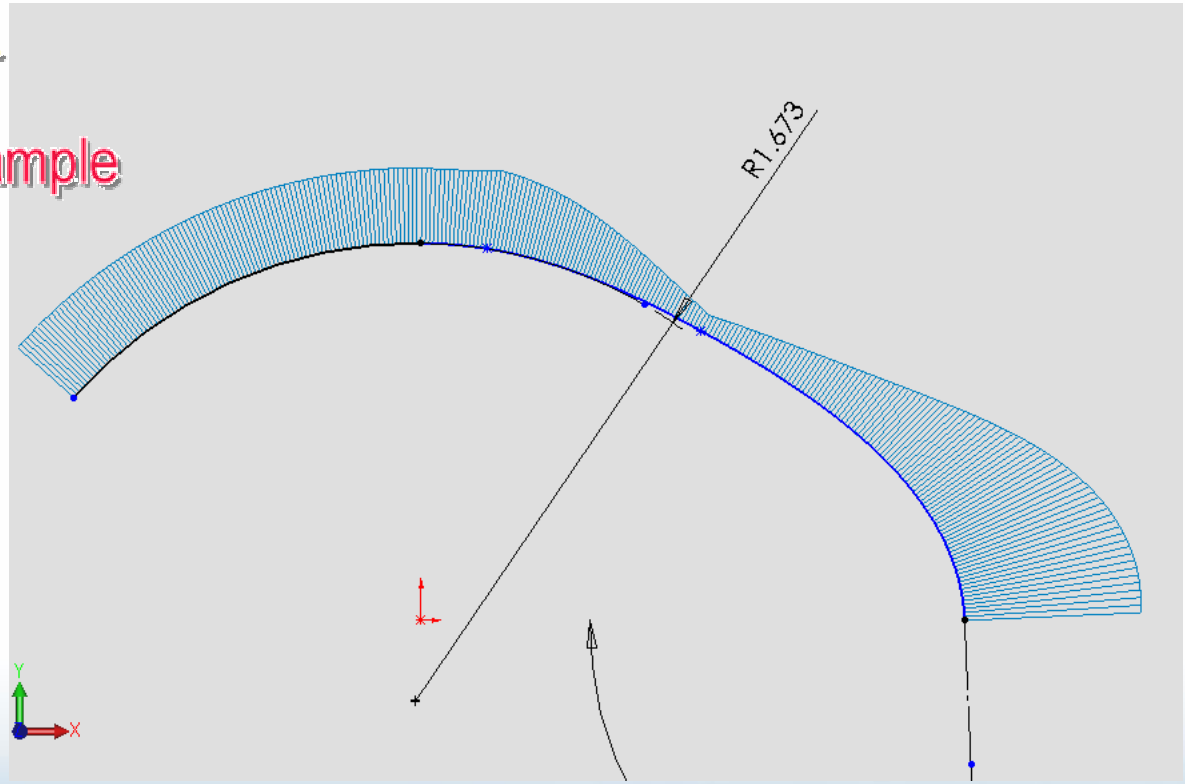

SolidWorks World

When to use Fill over Loft

3 Sided Loft will not offset because of degenerate vertex between common loft profile vertice

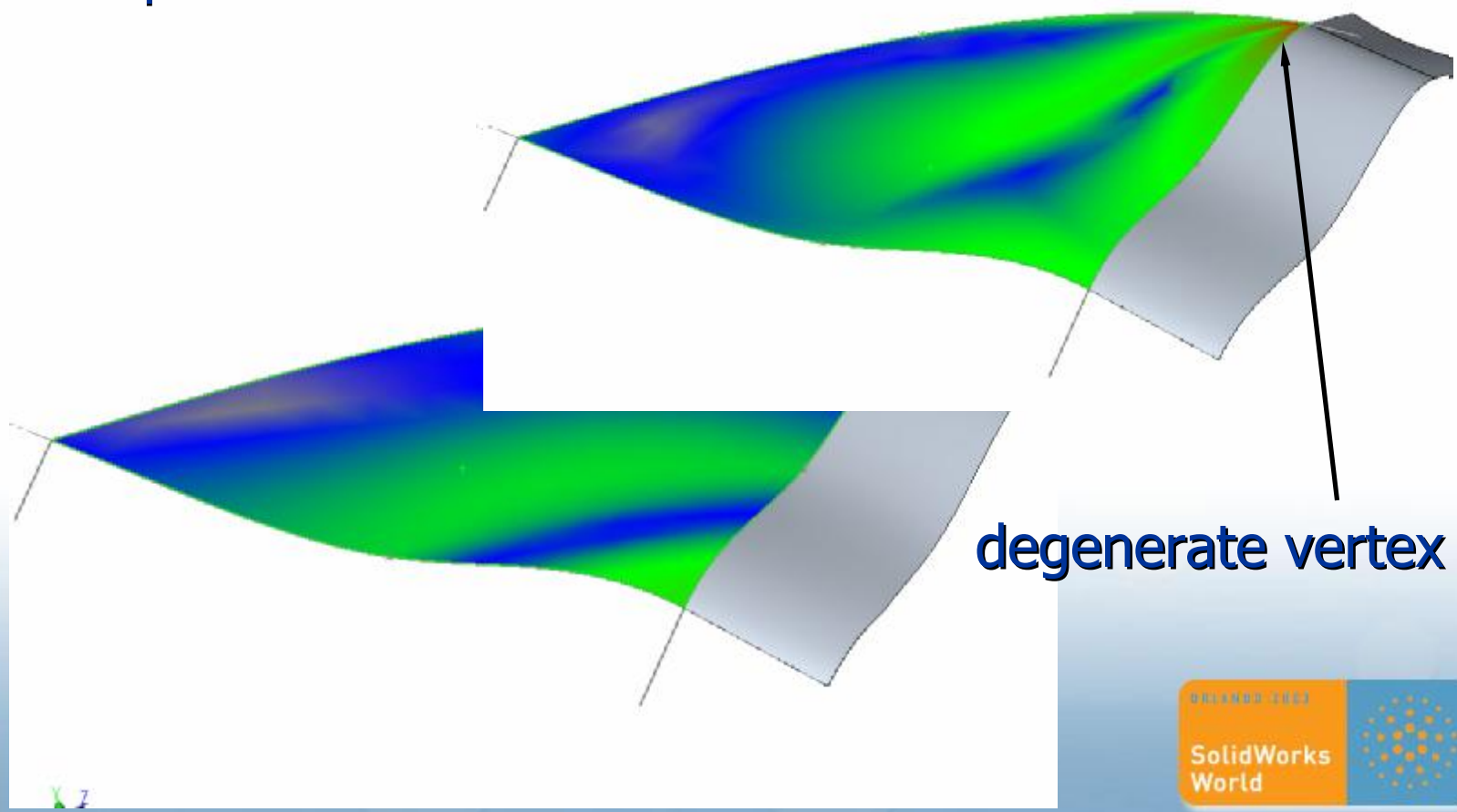

SolidWorks World

.oft with Guide Curve Tangency

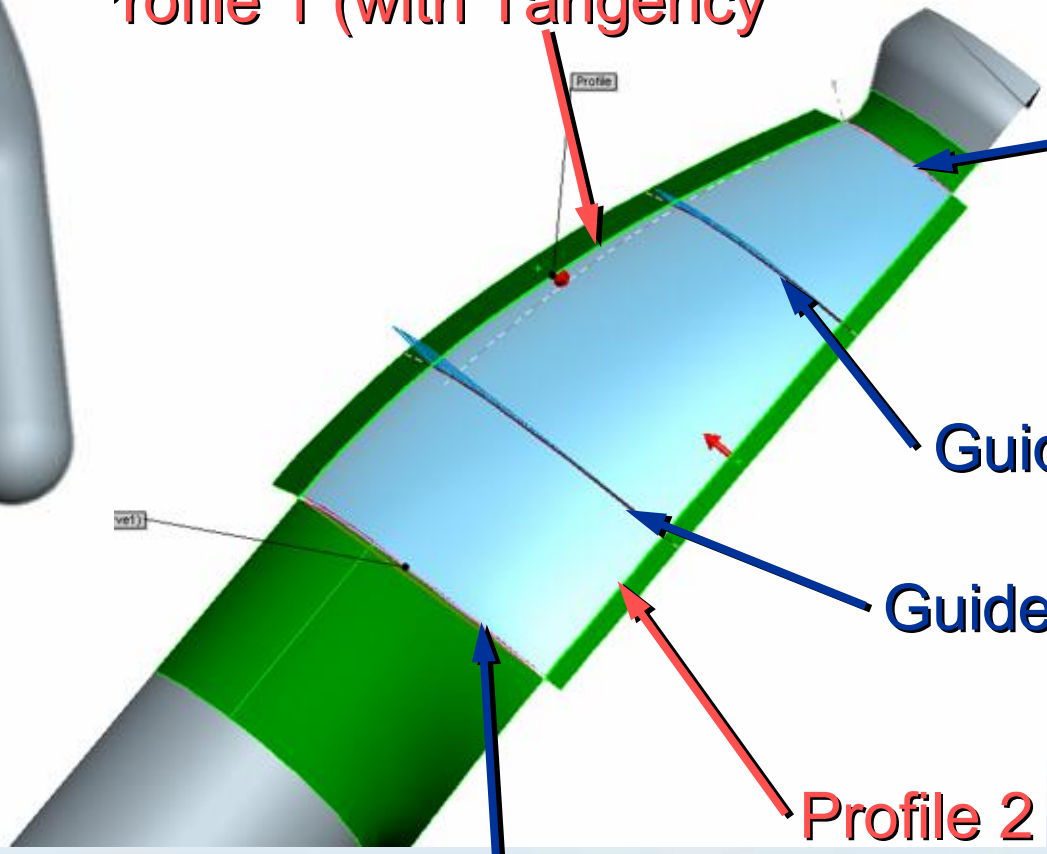

SolidWorks World

Using Fill

Different methods – Loft to Point

Loft between profile and sketch Point.

Key is making sketch point "normal to profile.

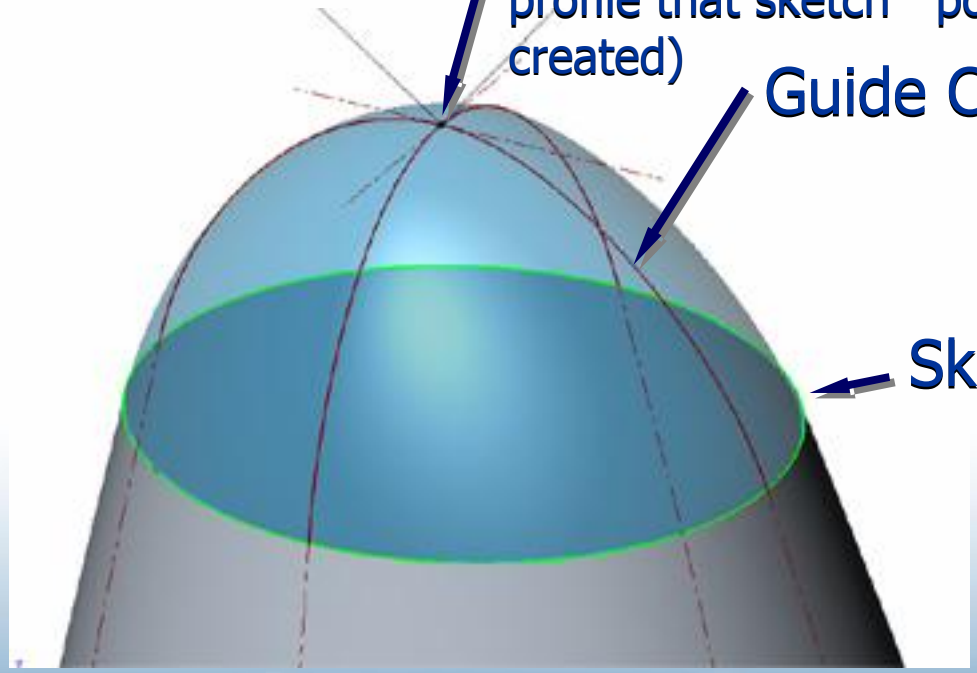

SolidWorks World

Different methods – Loft 3 Profiles

Loft between three sketch profiles; all with common end vertices.

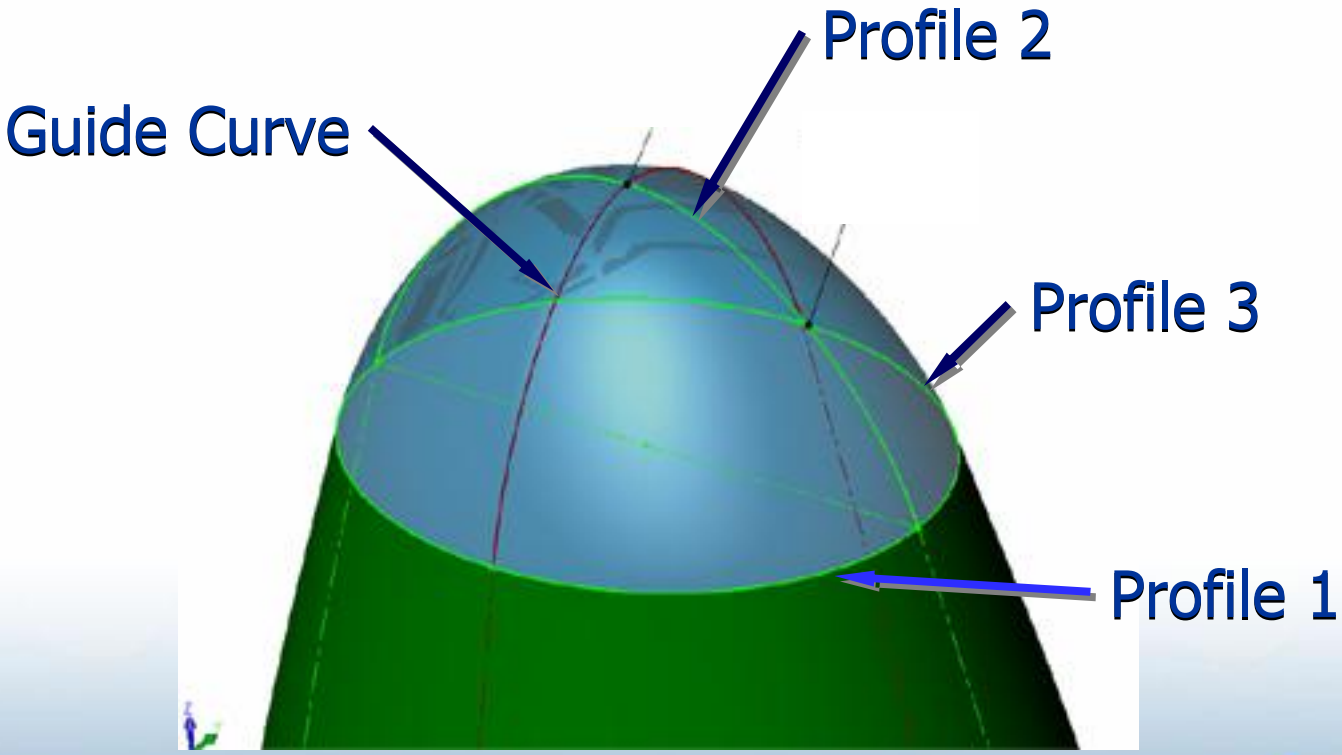

SolidWorks World

Different methods – Sweep with Guides

Sweep profile thru 2 guides to tangent end point

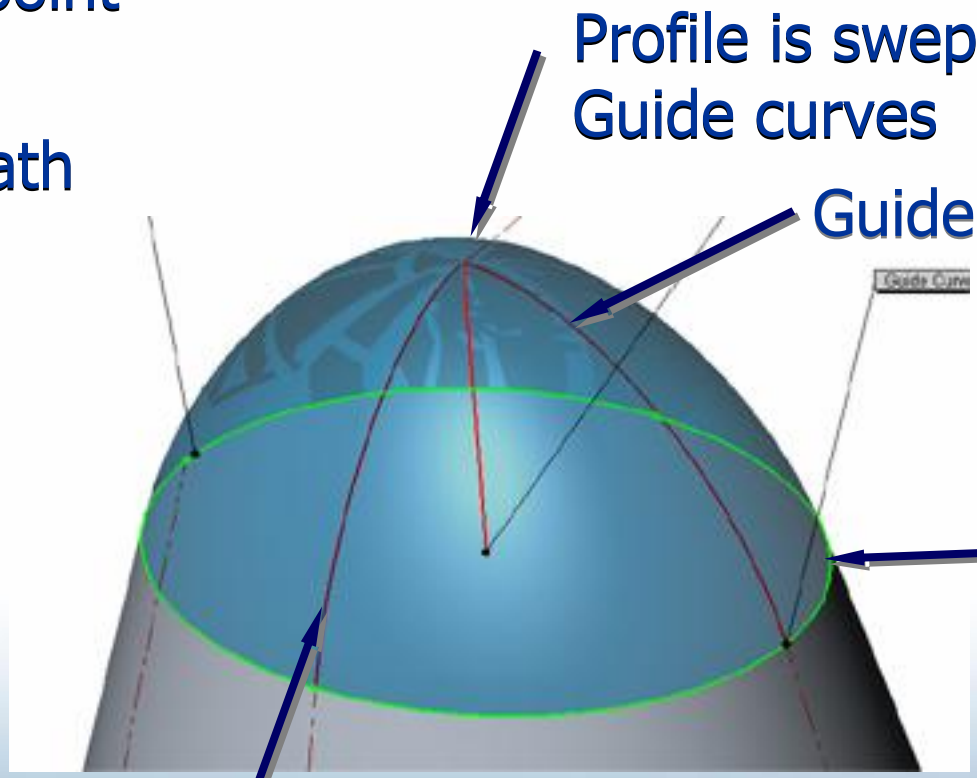

SolidWorks World

Different methods – Sweep with Guide Closed loop

Sweep profile thru 2 guides to tangent end point

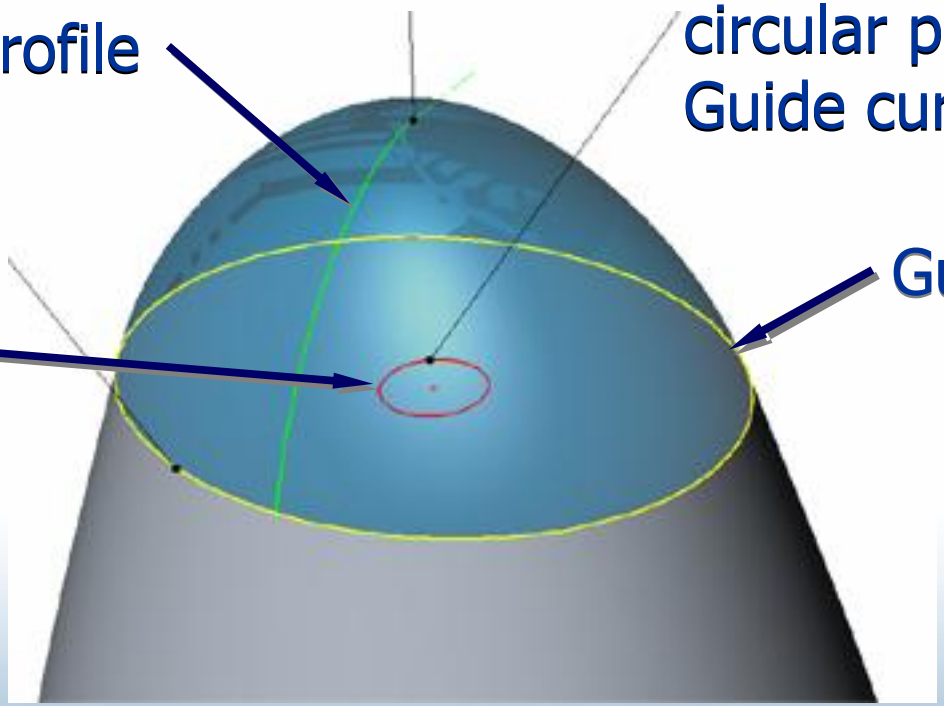

Different methods – Using Fill with Constraint Curves

Fill Surface built to single boundary with curves constraining cross section

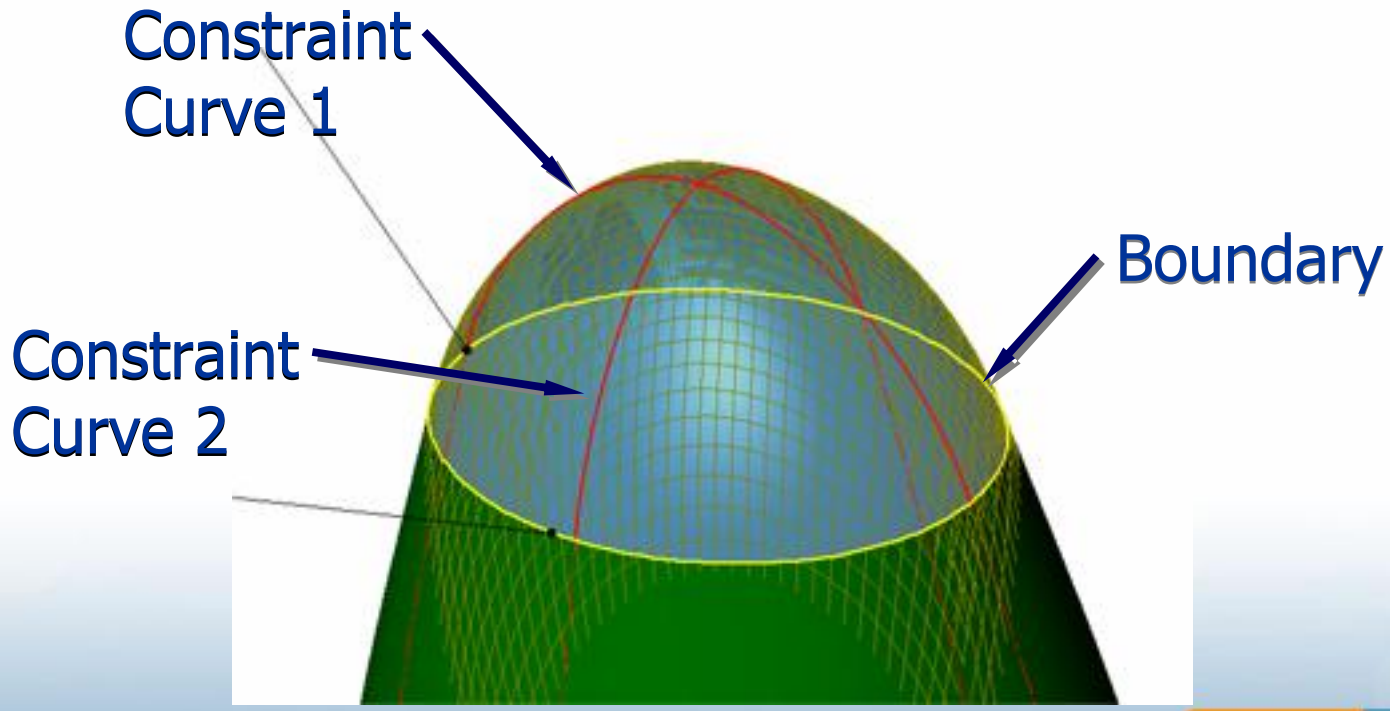

SolidWorks World

Lofted Surface

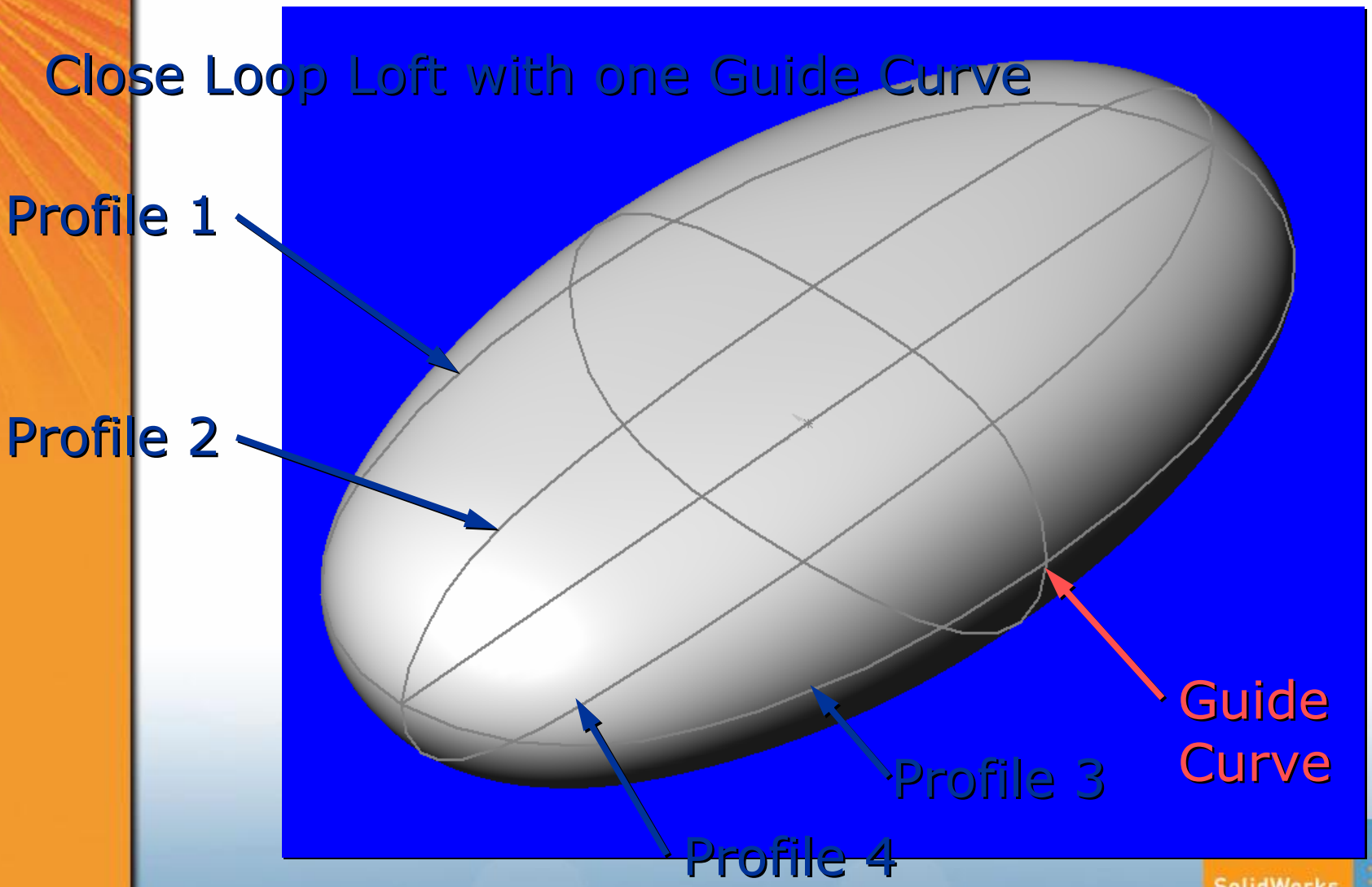

SolidWorks World

Controlling Fill Surface Feature

Using Reference surfaces for the boundaries of the fill can dramatically change the shape of the fill surface.

Example

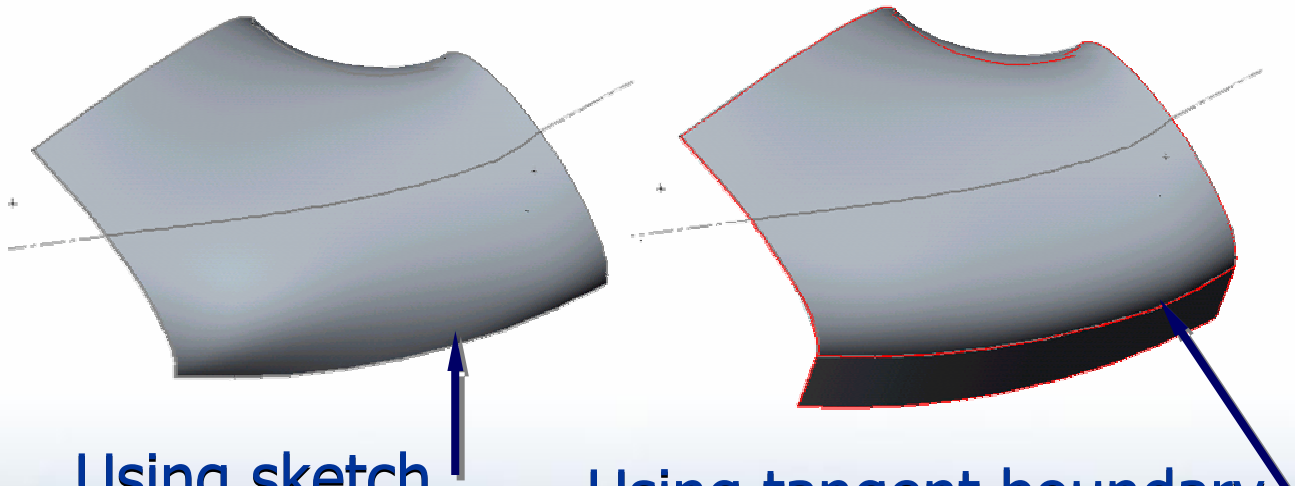

Using sketch contact

Using tangent boundary of Ref. Surface

SolidWorks World

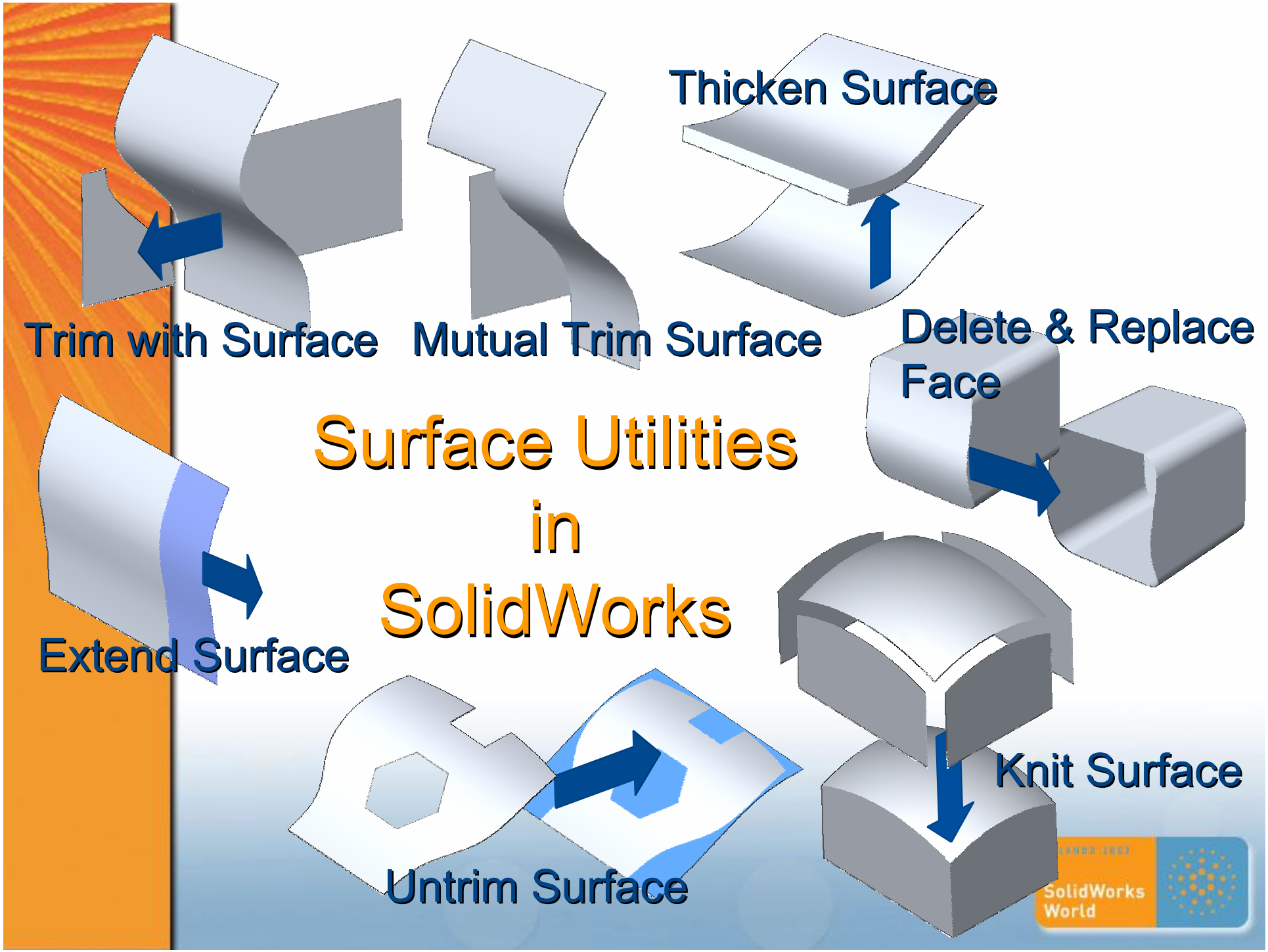
Thicken Surface
Trim with Surface
Mutual Trim Surface
Delete & Replace Face
Surface Utilities in SolidWorks
Extend Surface
Knit Surface
Untrim Surface
SolidWorks World

Trimming and Extending

Trim and Mutual trim

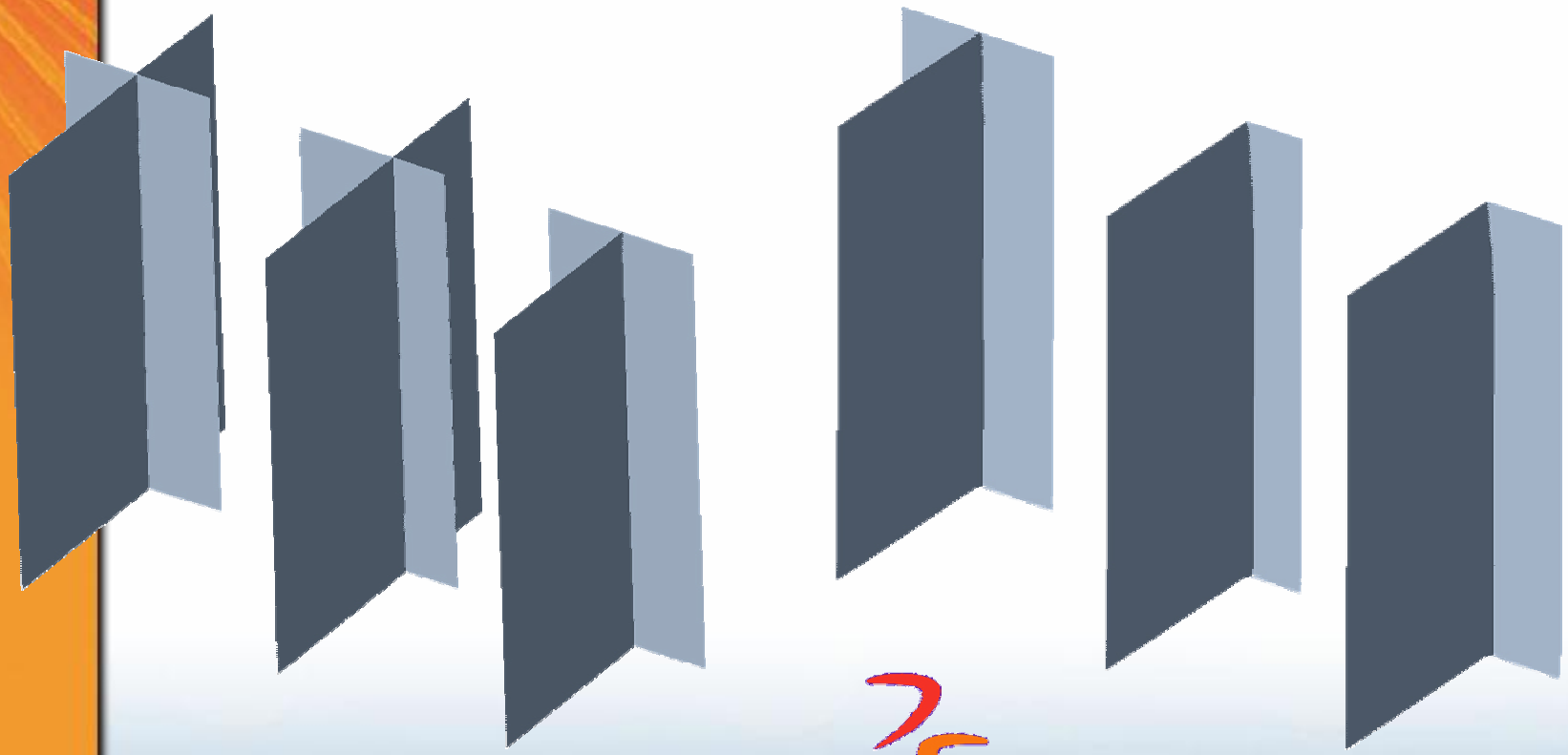

Example

SolidWorks World

Mutual Trim Knitting/Thickening Exercise

exercise/exercise-knit-make-solid.SLDPRT

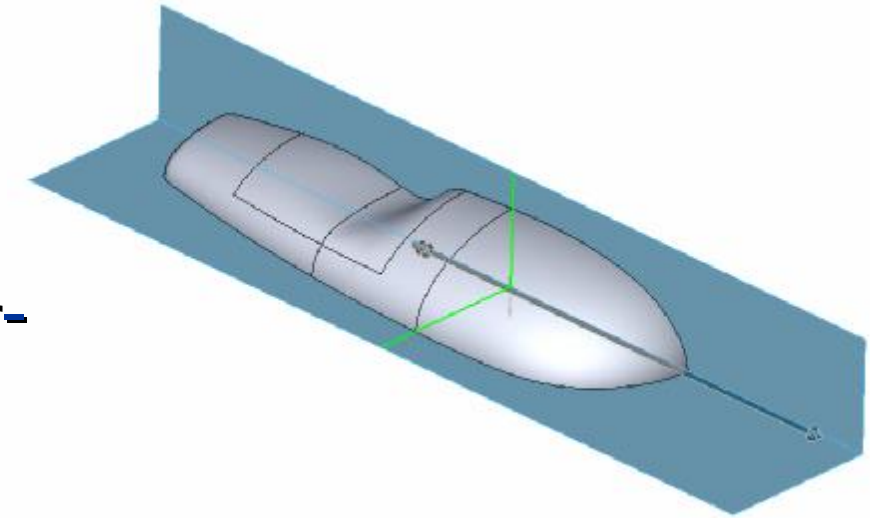

1) Open file and extrude a surface using sketch ”Sketch-for-side-top-surf “.
2) Use the end condition “mid-plane making sure surfaces extend beyond existing remote surfaces.

SolidWorks World

Mutual Trim Knitting/Thickening Exercise

3) Select the surface body filter tool (customize it in if you don't have it in your filters toolbar) and INSERT/SURFACE/KNIT
4) Select the five surface bodies and complete the knit featur

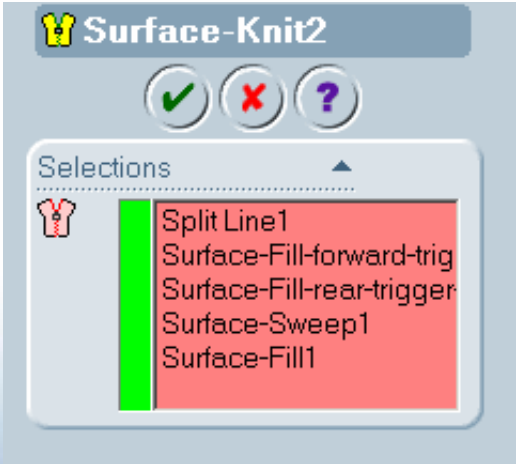

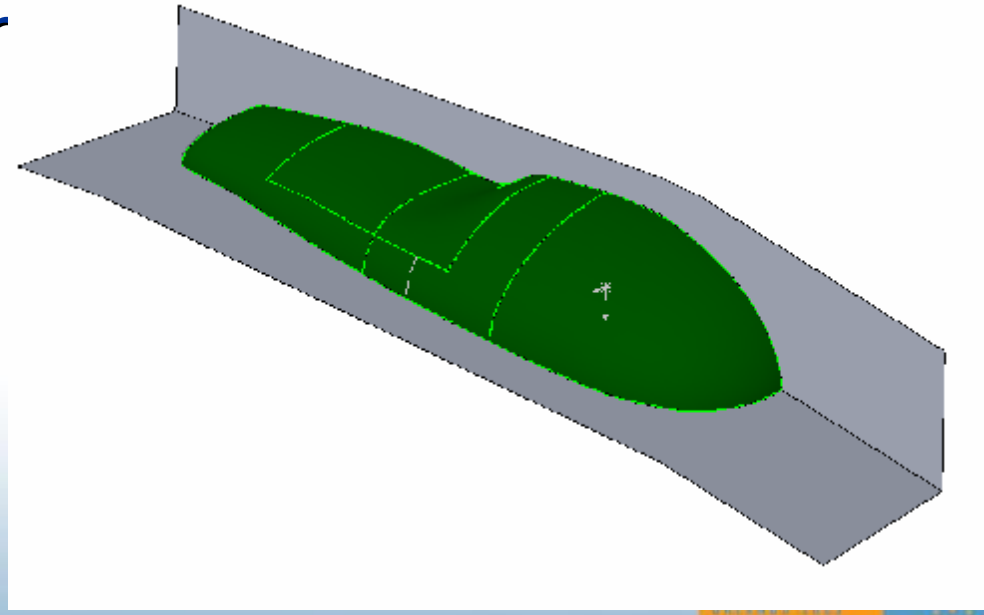

SolidWorks World

Mutual Trim Knitting/Thickening Exercise

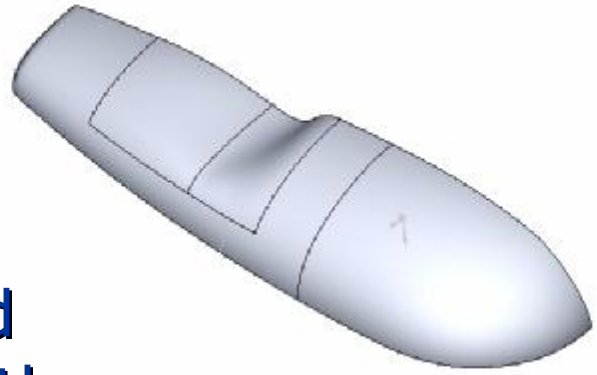

5) Deselect the surface bodies filter.
6) INSERT/SURFACE/TRIM and select the Surface-knit1 as the trim tool.
7) Click on the inner part of the Surface-extrude5 and RMB OK.
8) Shift select the last two features in the FM and INSERT/SURFACE/KNIT and complete the feature.

ORLANDO 2013
SolidWorks World

Mutual Trim Knitting/Thickening Exercise

9) The final step is to make your surface body solid. Go to INSERT/BOSS/THICKEN.
10) Check the "Create Solid from enclose volume.
11) Click OK
12) Your surface body is now a solid part.

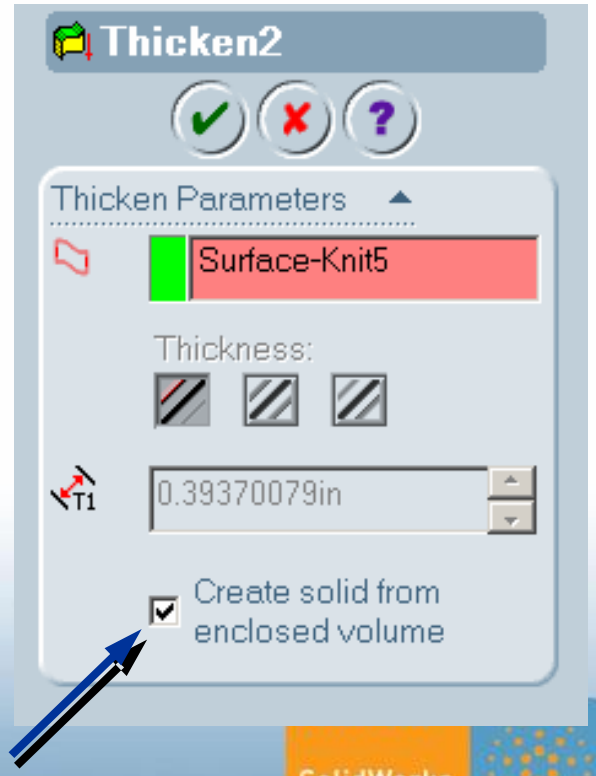

SolidWorks World

Shelling Problems

Example

"Degenerate Vertex"

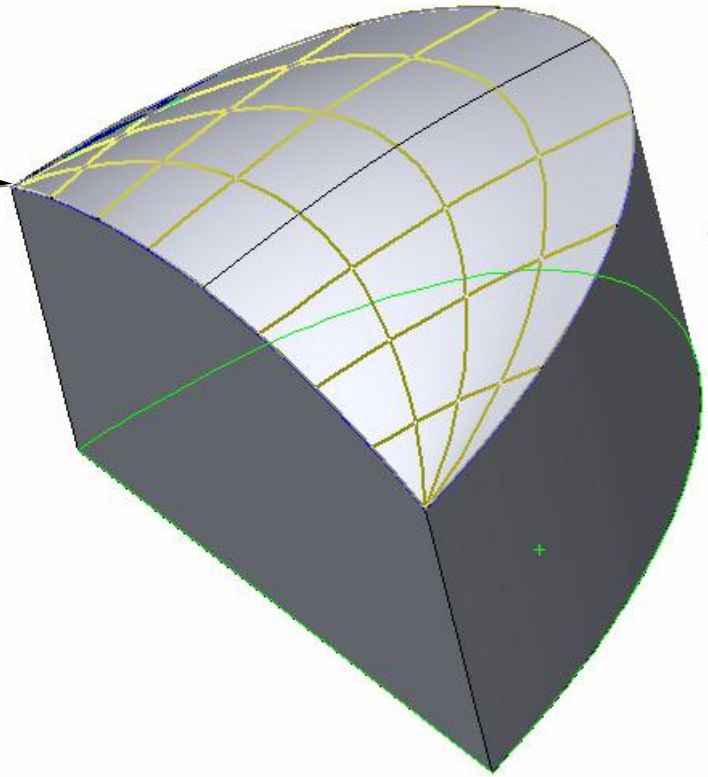

3 sided surfaces
will not shell.

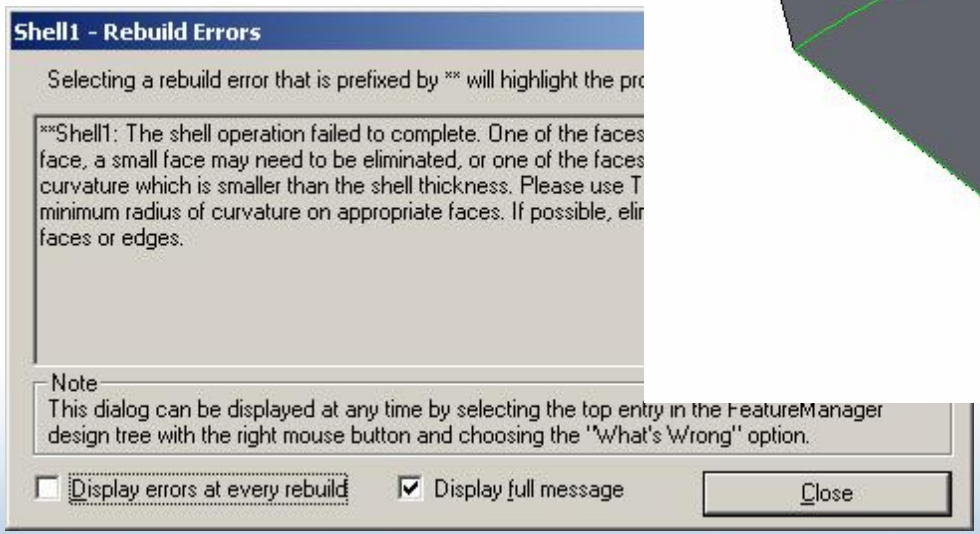

SolidWorks World

Shelling Problems

Use Multi-thickness settings to get shell to “solve”.

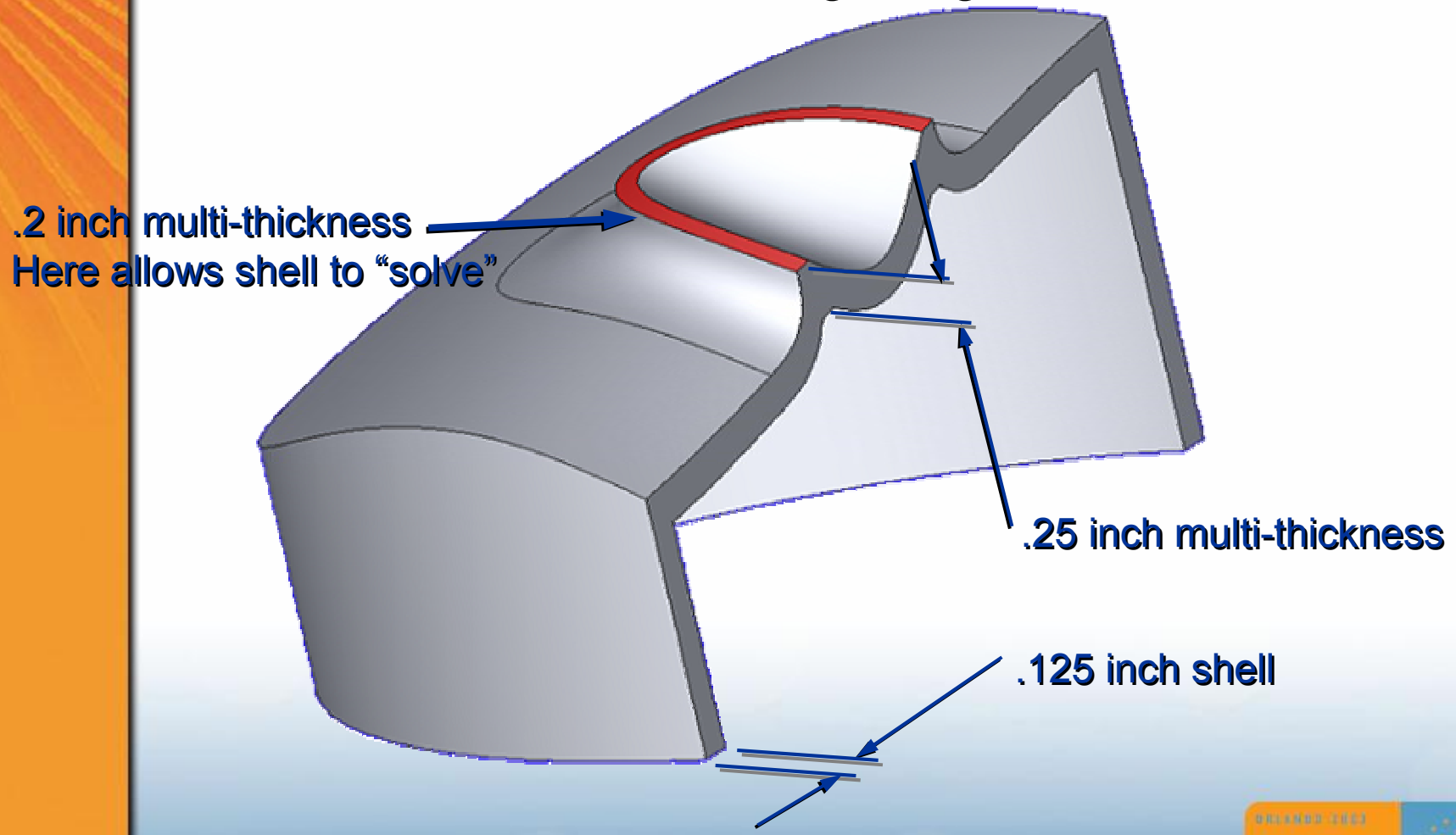

SolidWorks World

Shelling Exercise 1

exercise/exercise-shell-error1.SLDPRT

1) Try to discover the error that is causing this keypad part's shell to fail.
2) Use the diagnostic cut to isolate the shell problem by cutting away "Known" good areas, and pinpoint "bad" areas.

Example

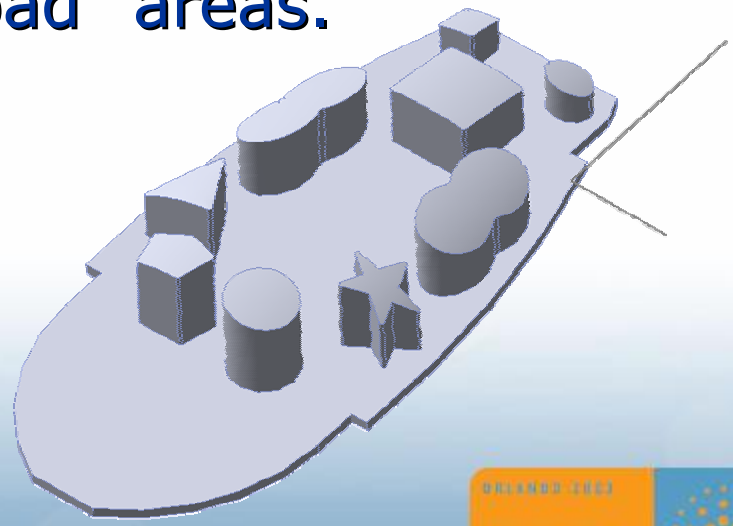

SolidWorks World

Case Example of Shell workaround

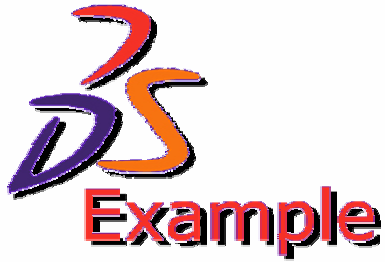

SolidWorks World

Shelling Tips

- Test Surfaces as you build by using Offset Surface.
- Cut away rest of model that you know is error free
- Work within the shell while it is Suppress.
- Beware of some Variable Fillets that will not shell.
- Use multi-thickness to “help” shell to solve.
- Avoid “3 Sided” or “Triangular” surfaces.
- Avoid Cut-with-Surface along surface to solid edges.

SolidWorks World

Replace Face/s

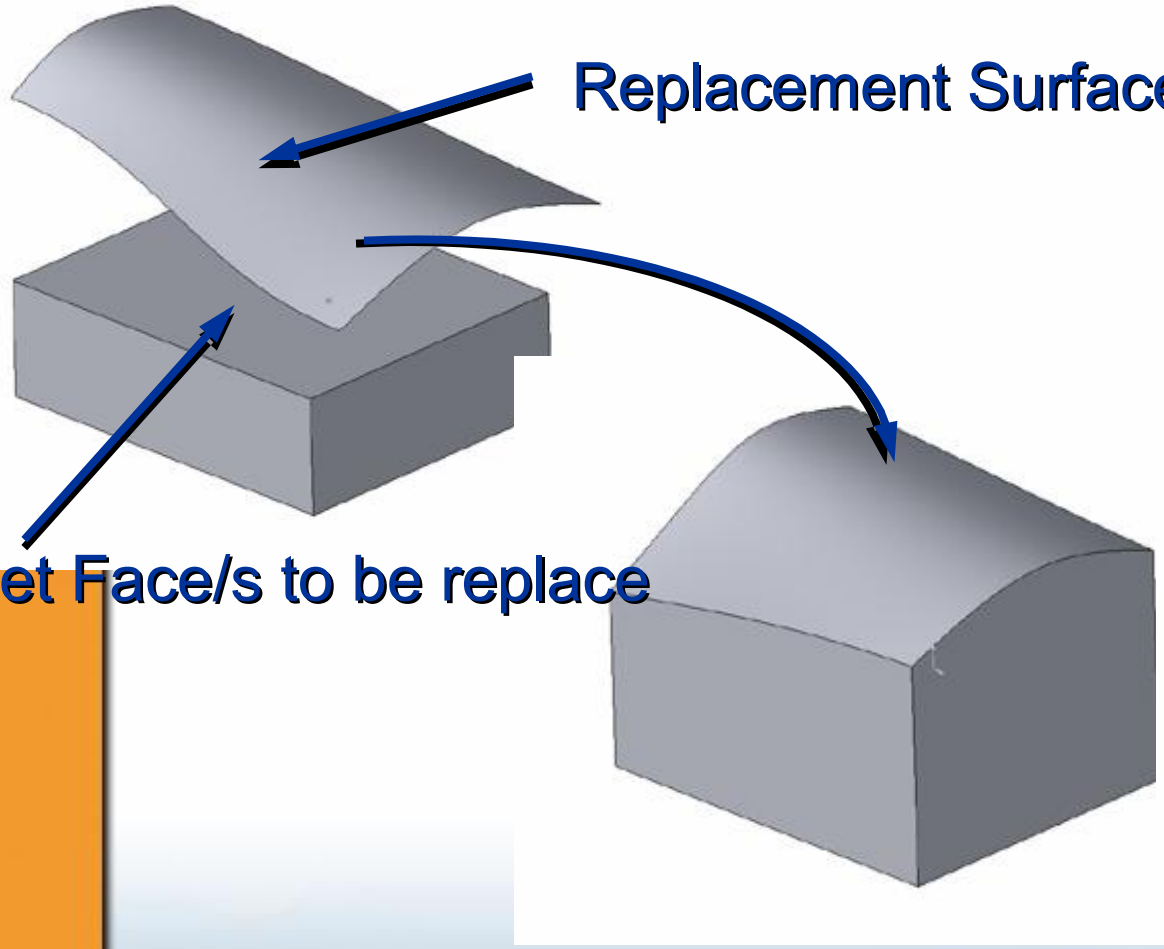

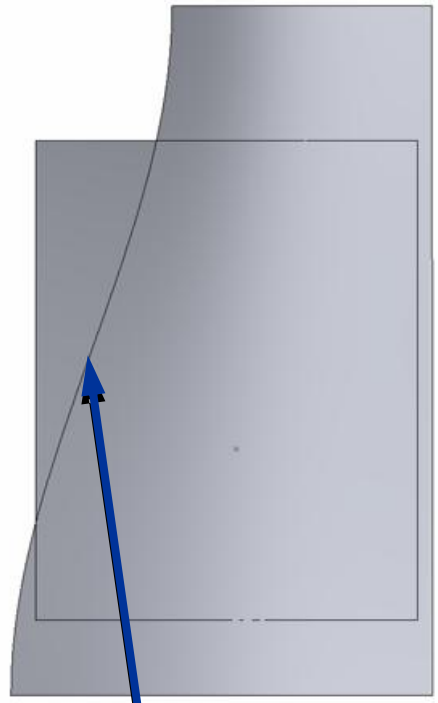

Notice that surface does not have to bound target face

SolidWorks World

Replace Face

Example

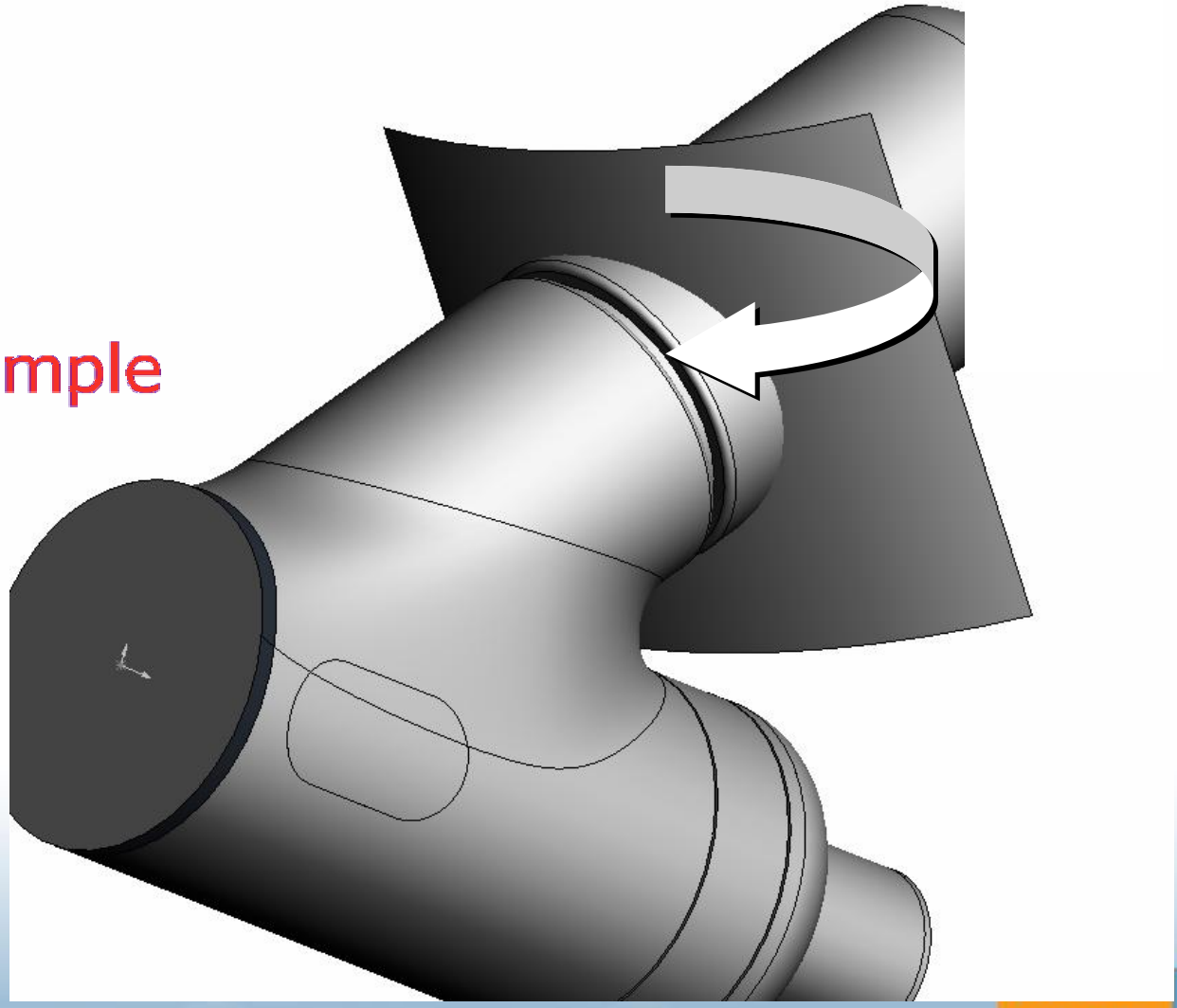

SolidWorks World

Delete Face

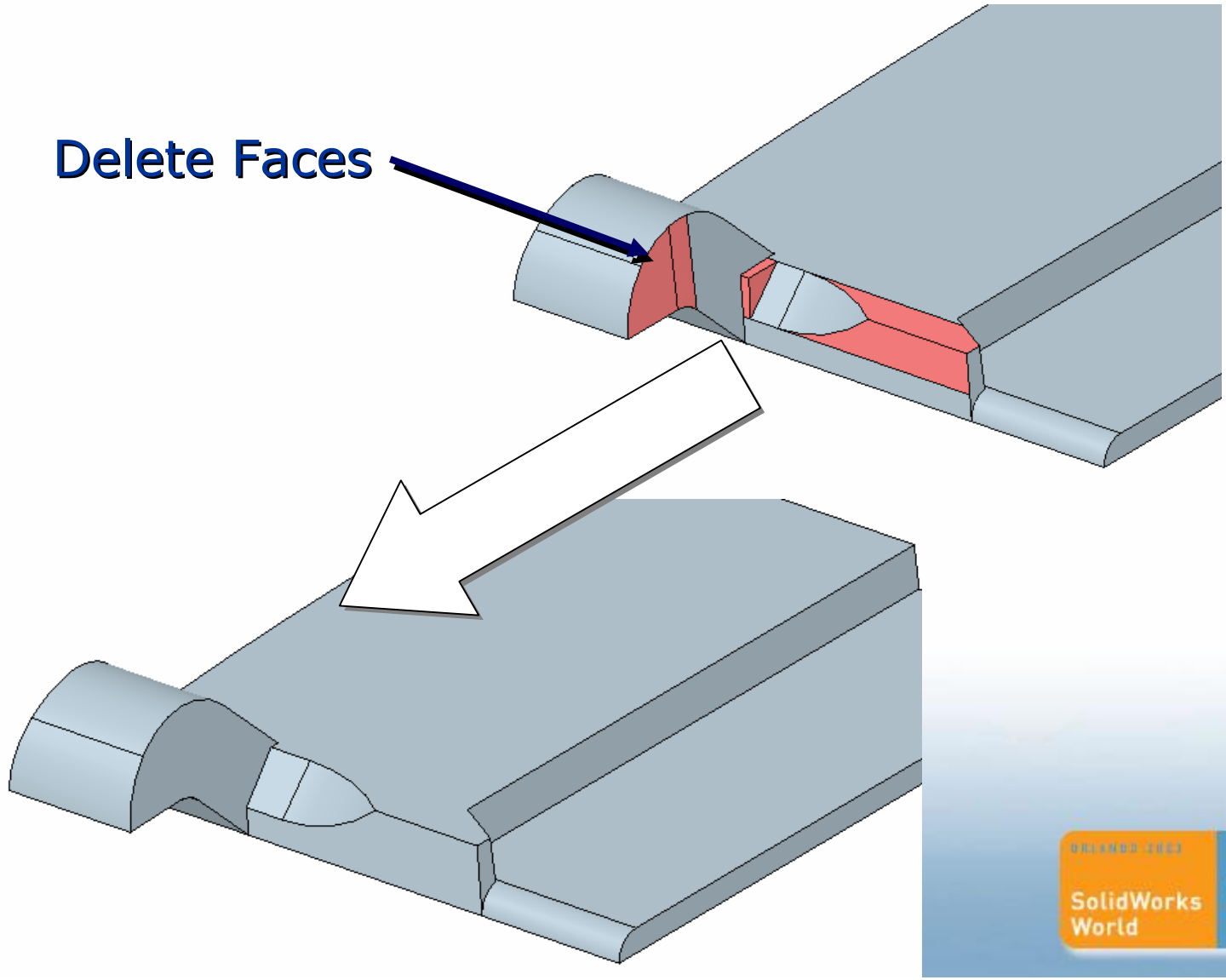

SolidWorks World

Base Part Technique

Base Part

Surfaces can now be included

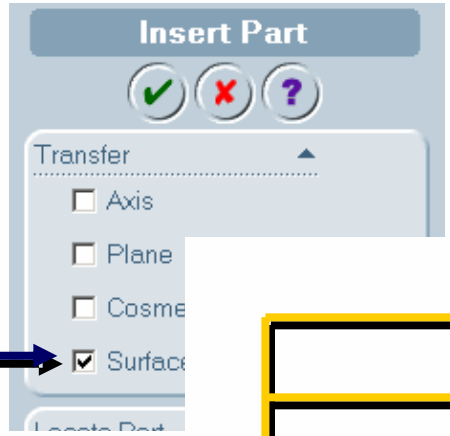

Derived Parts

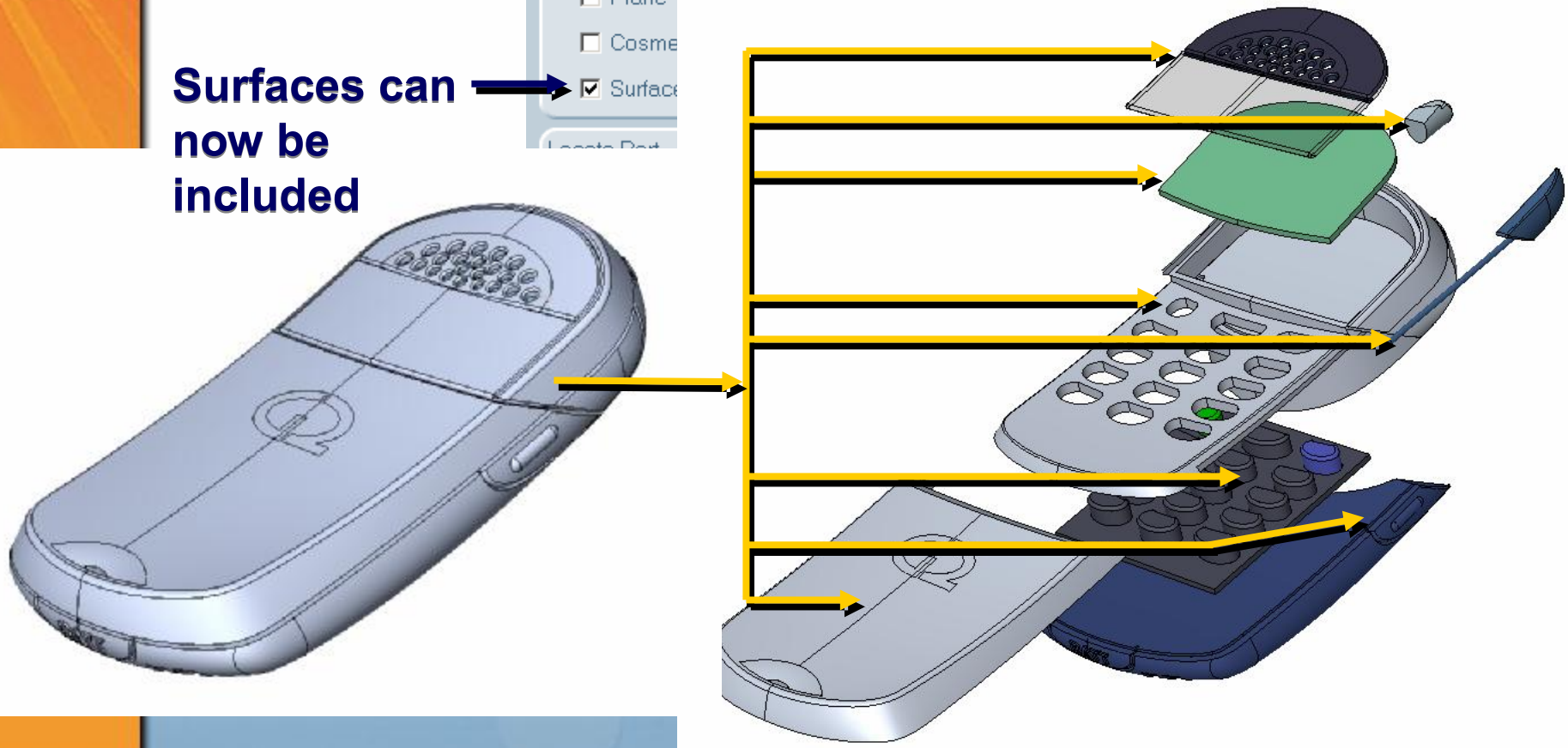

Split Part Technique

Example

Master Model with Part line Quilts

All Solid parts "Split out"

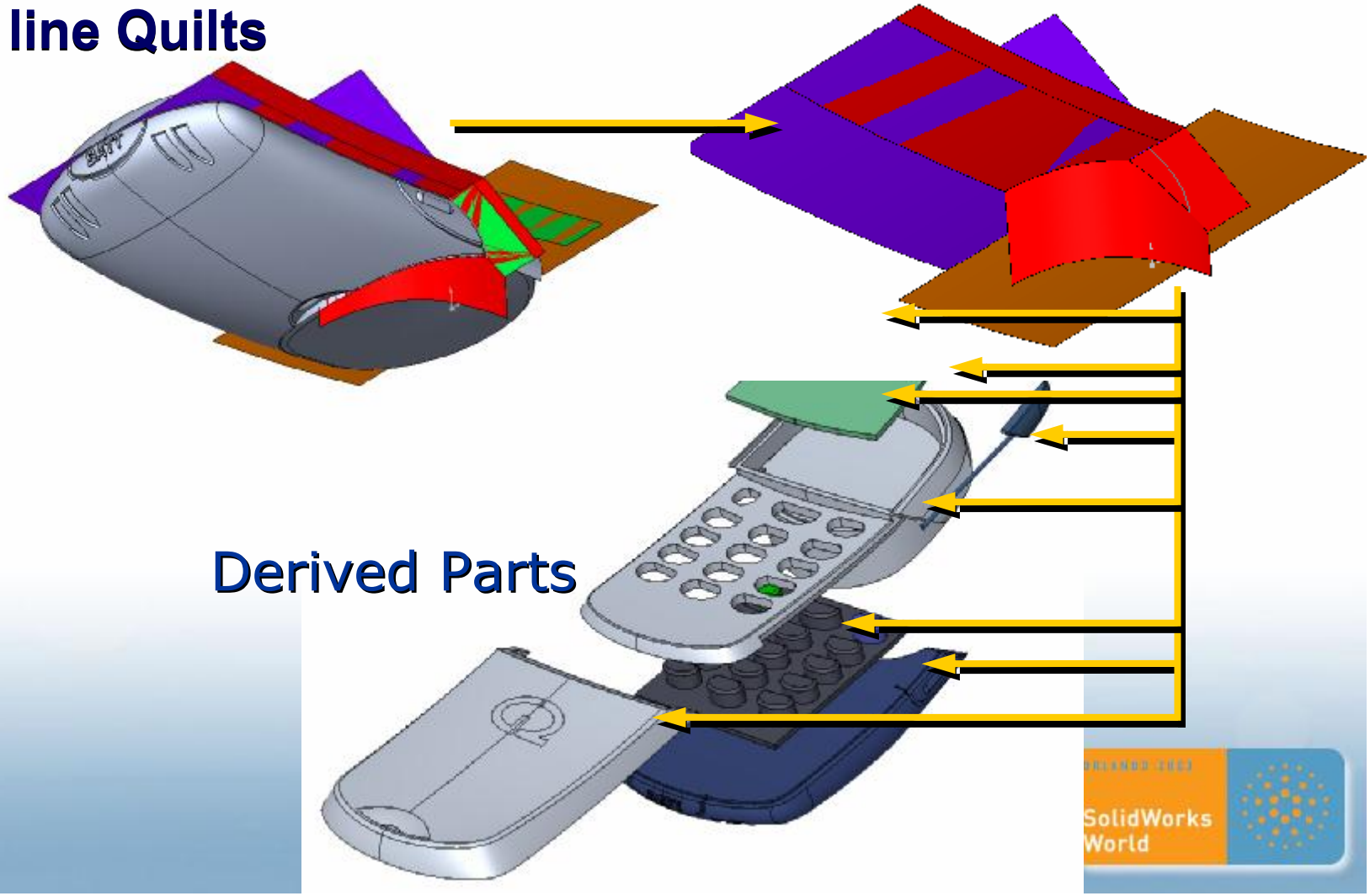

SolidWorks World

Split Part Technique

Rt. Click to let SWX Build an Assembly automatically from your split parts.

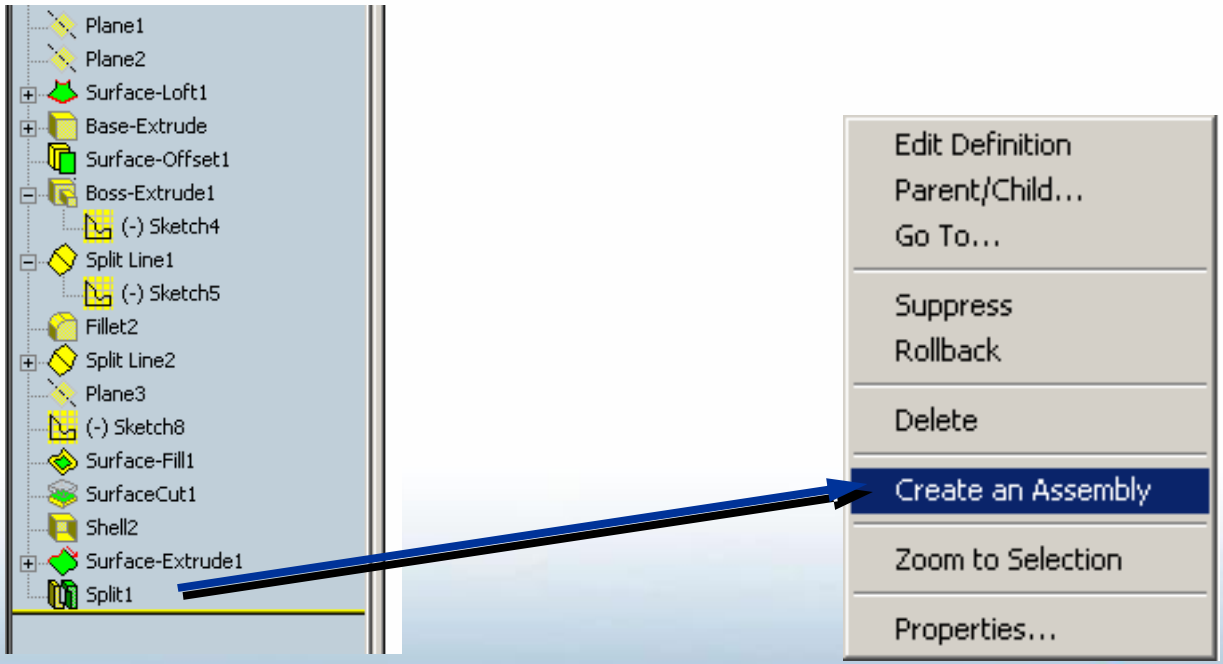

Split Part Technique

Beware, Split Parts who's Master Part fails, can not be (currently) redefined!

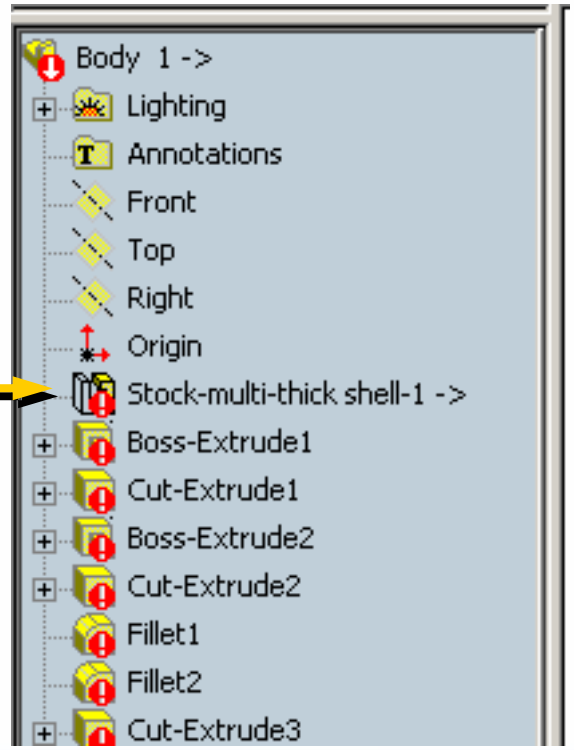

SolidWorks World

Split Part Multi-Body Technique

Example

1) Master Model **2) Split Part “keep”** **3) Derive Parts “out”**

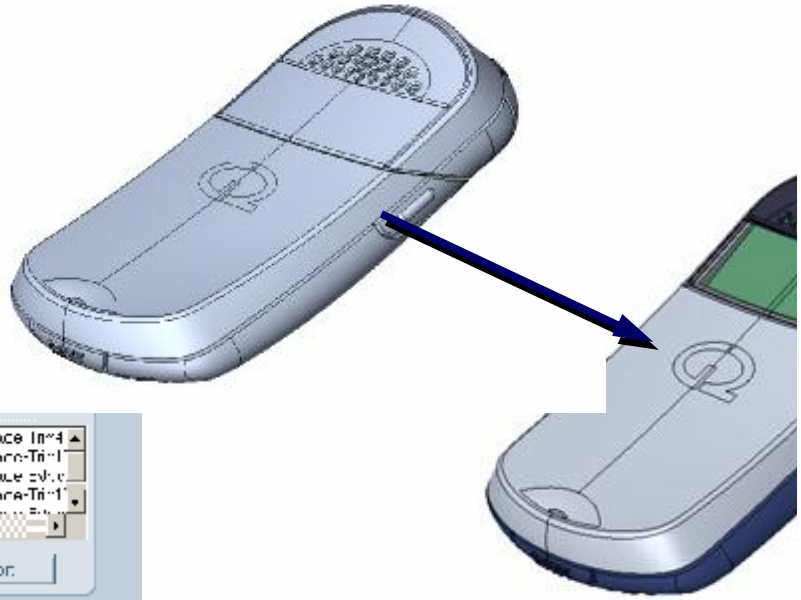

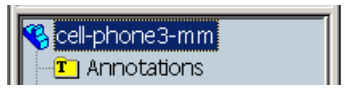

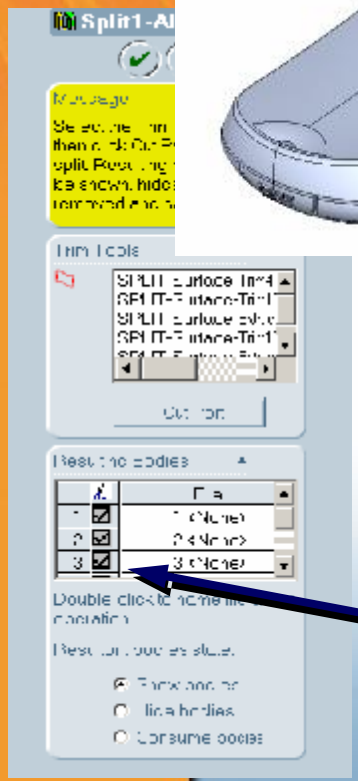

check mark here to keep multiple Bodies in part

SolidWorks World